CLD 4000 EH

Electro-hydraulic 2-post lift

Installation, Operation and Maintenance Manual

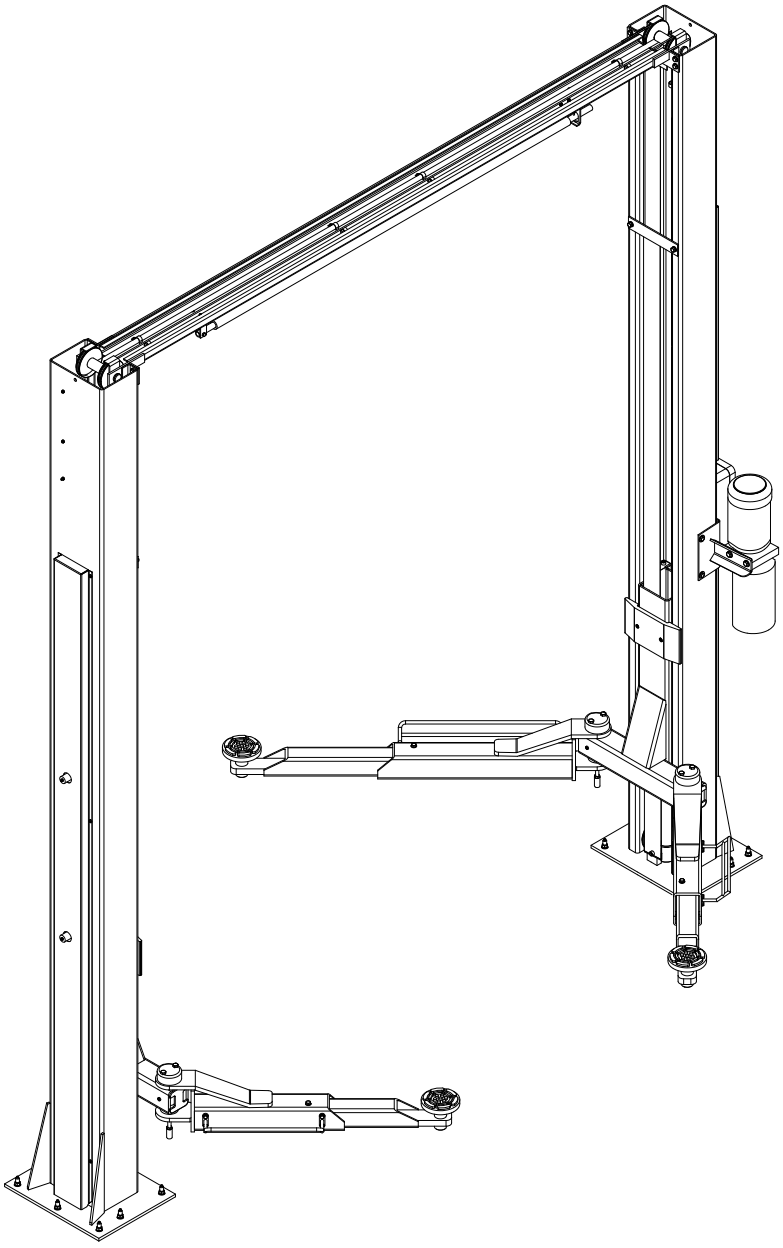

Please read through this manual before operation. You must read and understand the precautions for safety to protect your safety and any damage to your property.

English edition | HAMMER TOOLS
Schnydersäcker 453, 8262 Ramsen | info@hammer-tools.ch | 052 345 00 00

About this edition

This complete edition follows all 44 original pages in the same order. It includes the chapters, safety instructions, maintenance steps, tables, figures, electrical and hydraulic diagrams and exploded views. No new operating sequence has been added.

Original figure and internal page references are retained. Printed source pages 1 to 26 correspond to PDF pages 7 to 32 in this edition. Contents references use the original printed numbers. Both numbering systems appear in the footer.

Drawings and technical identifiers remain faithful to the source. Position numbers, terminal identifiers, standards and part numbers are preserved.

The drawing legend covers Figs. 1 (page 7), 6 and 7 (page 10), 8 (page 11), 26 (page 18), 35 and 36 (page 21) and the electrical diagrams (pages 30 and 31). Other drawings contain only technical numbers or captions.

The source contains inconsistent figure/page references and a few unclear phrases. These are identified where relevant. Contact Hammer Tools before acting on an unclear instruction.

Approved configuration: capacity 4000 kg; motor 2.2 kW; short arms 685-1100 mm; long arms 845-1330 mm. Conflicting source values have been corrected in Table 1, Fig. 5 and the motor entries in the parts lists. Fuse, protection and connection ratings have not been recalculated.

NOTE TO THE USER Thank you for purchasing our products. Please read this instruction carefully for safe and proper use of the car lift, and keep it handy for future reference. • This Manual is for model : CLD 4000 EH • As for the assurance of safety in design and construction of car lift, read this Manual first. • Please make sure that this manual is delivered to end users for their implementation of safety. • Don't use the car lift in a potentially explosive atmosphere. ANY PART OF THIS PRINT MUST NOT BE REPRODUCED IN ANY FORM WITHOUT PERMISSION. THIS PRINT IS SUBJECT TO CHANGE WITHOUT NOTICE.

Drawing legend

Original	English edition
Command side	Command side
Service side	Service side
Front side	Front side
Rear side	Rear side
Operator area	Operator area
Safety area	Safety area
Working area	Working area
Min. / Max.	Min. / Max.
MAX. 4,000kg	MAX. 4,000kg
Motor	Motor
Transformer	Transformer
Limit switch	Limit switch
Solenoid	Solenoid
Up	Up
Down	Down
Lock	Lock
Power	Power

The drawing legend covers Figs. 1 (page 7), 6 and 7 (page 10), 8 (page 11), 26 (page 18), 35 and 36 (page 21) and the electrical diagrams (pages 30 and 31). Other drawings contain only technical numbers or captions.

Table of contents

Chapter 1 DESCRIPTION OF THE MACHINE 1
1.1 FIXED STRUCTURE 1
1.2 MOVING UNITS 1
1.3 LIFTING UNITS 2
1.4 HYDRAULIC POWER UNIT 2
1.5 CONTROL BOX 2
1.6 SAFETY DEVICES 2

Chapter 2 TECHNICAL SPECIFICATIONS 3
2.1 OVERALL DIMENSIONS 3
2.2 ELECTRIC MOTOR 3
2.3 HYDRAULIC UNIT PUMP 3
2.4 OIL 3
2.5 HYDRAULIC OIL HOSE CONNECTION DIAGRAM 4
2.6 VEHICLE WEIGHT AND SIZE 4
2.7 MAXIMUM DIMENSIONS OF VEHICLES TO BE LIFTED 4

Chapter 3 SAFETY 5
3.1 GENERAL PRECAUTIONS 5
3.2 RISKS OF ELECTRIC SHOCK 6
3.3 RISKS AND PROTECTION DEVICE 6
3.4 LONGITUDINAL AND LATERAL MOVEMENT 6
3.5 RISKS WHILE THE VEHICLE IS BEING RAISED 6
3.6 RISKS OF PERSONS 7
3.7 SAFETY INSTRUCTIONS FOR SERVICING 10

Chapter 4 INSTALLATION 11
4.1 INSTALLATION REQUISITE CHECKLIST 11
4.2 LIGHTING 11
4.3 FLOOR 11
4.4 ASSEMBLING 12
4.5 TESTING AND CHECKS TO PERFORM BEFORE START-UP 15
4.6 SET UP 16

Chapter 5 OPERATIONS AND USE 17
5.1 COMMANDS 17
5.2 OPERATING SEQUENCE 17

Table of contents

Chapter 6 MAINTENANCE 18
6.1 PRECAUTIONS 18
6.2 PERIODIC MAINTENANCE 18
6.3 PERIODIC LUBRICATION CHART 20

Chapter 7 TROUBLESHOOTING 21
7.1 TROUBLESHOOTING GUIDE 21
7.2 POSSIBLE PROBLEMS AND SOLUTIONS 21

APPENDIX A SPECIAL NOTES 22

APPENDIX B HYDRAULIC OIL HOSE CONNECTION DIAGRAM 23

APPENDIX C ELECTRICAL WIRING DIAGRAM 24

APPENDIX D SPARE PARTS 26

Chapter 1 DESCRIPTION OF THE MACHINE

The electro-hydraulic 2-post lift is a fixed installation. This means that it is anchored to the ground and built for lifting and positioning automobiles and vans at a certain height off the ground.

The lift consists of the following main parts:

• Fixed structure (posts + up beam);

• Moving units (carriages + arms);

• Lifting units (hydraulic cylinders + power unit);

• Control box;

• Safety devices.

Fig. 1 illustrates the working areas reserved for use by operators around the lift.

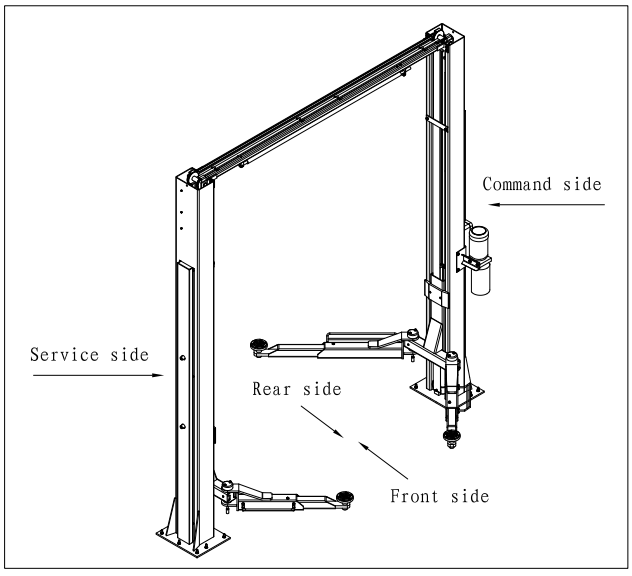

Fig. 1

• Command side: this side of the lift includes the area reserved for operators to access the control box.

• Service side: this is the opposite side of the command side.

• Front side: the side with the short arms.

• Rear side: the side with the long arms.

Fig. 2 illustrates the various parts of the lift.

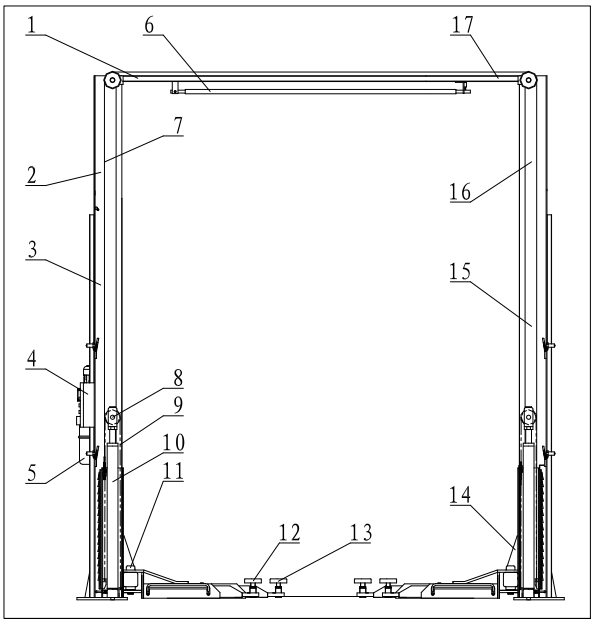

Fig. 2

1.1 FIXED STRUCTURE

The structure consists of:

• 2 posts, (service (Fig. 2-10) and command (Fig. 2-14) side post) built with bent steel plate. The base is welded to a drilled plate to be anchored to the floor. The electric control box (Fig. 2-4) and the hydraulic power unit (Fig. 2-5) are attached to the command post. Inside each post are the moving parts to lift the vehicles. The control panel and the hydraulic unit are fixed to the command post.

• An upper beam (Fig. 2-1 & Fig. 2-17) built with bent steel plate, connecting the upper posts with bolts.

1.2 MOVING UNITS

Each unit consists of:

• Both carriage (Fig. 2-10 and Fig. 2-14) built with welded steel plate. It joints by chain (Fig. 2 -8) and the cable (Fig. 2-7), and at the bottom to the lift arms by means of pins.

• The carriage moves along the post, guided by plastic sliding pads, located inside the post itself.

• Two telescopic arms, one long (Fig. 2-13) and one short (Fig. 2-12), built with tubular steel with a pad at each end that can be height adjusted to hold the car and on the opposite side the carriage connection hole.

1.3 LIFTING UNIT

It consists of:

• 2 hydraulic cylinders (Fig. 2-10), the carriages run by chains and synchronized by steel cables.

• 1 hydraulic unit (Fig. 2-2), on the command side, to set the cylinders run.

1.4 HYDRAULIC POWER UNIT

The hydraulic power unit consists of:

• An electric motor;

• A geared hydraulic pump;

• Descent hand-valve equipped with a manual oil drain valve; (see the use and maintenance chapter)

• A maximum pressure valve;

• Oil tank;

• An oil delivery and return flexible pipe to the cylinders feeding circuit.

Note: The oil delivery pipe may be under pressure.

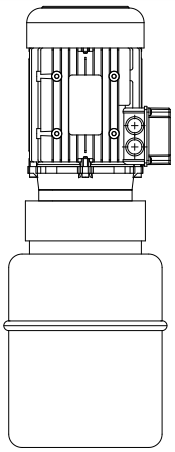

Fig. 3 Hydraulic Power Unit

1.5 CONTROL BOX

The panel that houses the electric control box contains the following:

• Main switch

• Up push button

• Down push button

• Lock push button

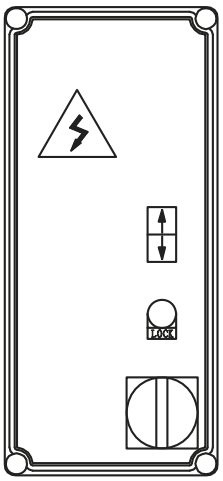

Fig. 4 Control Panel

1.6 SAFETY DEVICES

The safety devices include:

• Mechanical safety device for carriage;

• Arms locking system;

• 4 foot guards on the arms;

• A synchronous device to control the carriages movement;

• 2 post end limit switches;

• General electric safety devices;

• General hydraulic safety devices.

These safety devices will be described in further detail in the following chapters.

Chapter 2 TECHNICAL SPECIFICATIONS

2.1 OVERALL DIMENSIONS

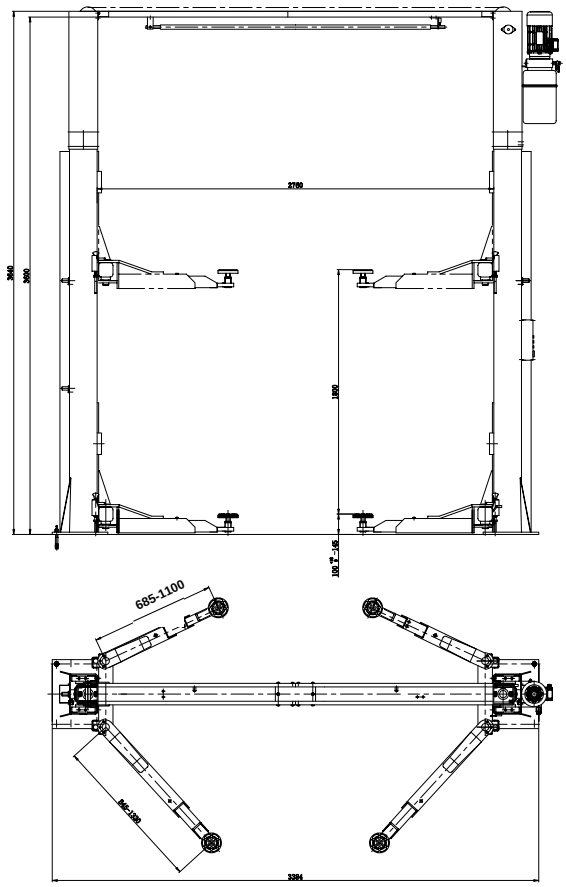

Fig. 5

Model	CLD 4000 EH
Capacity	4000 kg
Overall height	3940 mm
Overall width	3384 mm
Minimum height	100 mm
Maximum lifting height	1900 mm
Width between columns	2760 mm
Short arms	685-1100 mm
Long arms	845-1330 mm
Lifting time	≤ 60 s
Lowering time	≤ 40 s

Table 1

2.2 ELECTRIC MOTOR

	Three-phase	Single-phase
Power	2.2 kW	2.2 kW
Voltage	230-400 V 3ph +/-5%	230 V 1ph +/-5%
Frequency	50 Hz	50 Hz
Current	230 V: 11 A 400 V: 6.4 A	13 A
Number of poles	4	
Speed	1400 r.p.m.	1380 r.p.m.
Construction	B14	
Insulation class	IP54	IP54
Type	90L4	90L4

Table 2

The motor must be connected with reference to the attached wiring diagrams.

The motor rotation direction must be the same as shown by the arrow on the pump: if not, modify the electrical connections. (see Chapter 4 I N S T A L L A T I O N - E L E C T R I C P L A N T CONNECTION)

2.3 HYDRAULIC UNIT PUMP

Motor	3Ph	1Ph
Type	R	T
Model	PHC	PHC
Displacement	7.8 cm³/g	6.0 cm³/g
Coupling type	E32	E32
Continuous operating pressure	160 bar	150 bar
Max. pressure (peak)	180 bar	170 bar

Table 3

2.4 OIL

The oil reservoir contains hydraulic mineral oil in accordance with ISO/DIN 6743/4 with a level of contamination that does not exceed class 18/15 according to ISO 4406, for example IP HYDRUS OIL 32, SHELL TELLUS OIL T32 or equivalent.

2.5 HYDRAULIC OIL HOSE CONNECTION DIAGRAM

See APPENDIX C, HYDRAULIC OIL HOSE CONNECTION DIAGRAM. [Original reference: the contents identify the hydraulic diagram as Appendix B.]

2.6 VEHICLE WEIGHT AND SIZE

Lift rack can be adapted to virtually all vehicles no heavier than the following capacity:

CLD 4000 EH: 4000kg

the dimensions of which do not exceed the following:

Max width: 2400mm

Max wheelbase: 3000mm

2.7 MAXIMUM DIMENSIONS OF VEHICLES TO BE LIFTED

The underbody of cars with low ground clearance may interfere with the structure of the lift. Pay particular attention in the case of low body sports cars.

Always keep the capacity of the lift in mind in the case of vehicles with particular characteristics.

THE SAFETY area will be determined by the dimensions of the vehicle.

The diagrams below include the criteria for defining the limits of use of the lift.

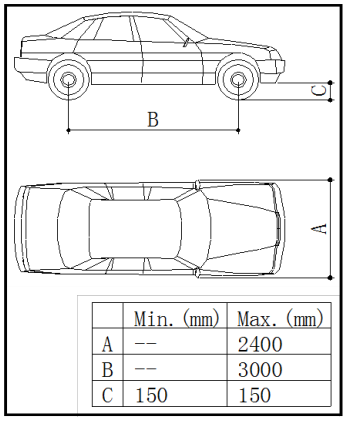

	Min. (mm)	Max. (mm)
A	--	2400
B	--	3000
C	150	150

Fig. 6

CHECK MAXIMUM LOAD CAPACITY AND LOAD DISTRIBUTION IN CASE OF LARGER VEHICLES. MAXIMUM WEIGHT OF THE VEHICLE TO BE LIFTED SHOULD NOT BE OVERLOADED.

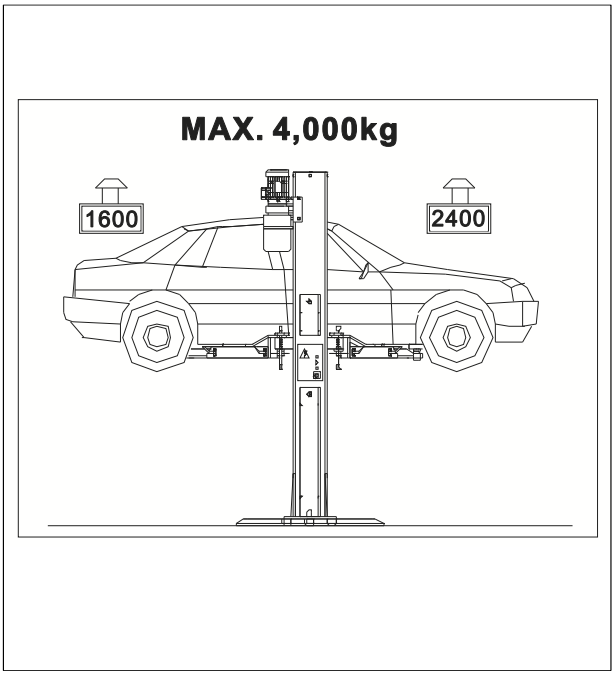

Fig. 7 Weight Distribution

Chapter 3 SAFETY

It is vital to read this chapter of the manual carefully and from beginning to end as it contains important information regarding the risks that the operator and the maintenance fitter may be exposed to in the eventuality that the lift is used incorrectly.

The following text contains clear explanations regarding certain situations of risk or danger that may arise during the operation or maintenance of the lift, the safety devices installed and the correct use of such systems, residual risks and operative procedures to use (general and specific precautions to eliminate potential hazards).

WARNING

Lift is designed and built to lift vehicles and hold them in the elevated position in a closed workshop. All other uses are unauthorized; in particular, the lift is not suitable for:

• Washing and “respire work” [unclear wording in the original];

• Creating raised platforms or lifting personnel;

• Use as a makeshift press for crushing purpose;

• Use as goods lift

• Use as a jack for lifting vehicles or changing wheels.

THE MANUFACTURE DISCLAIMS ALL LIABILITY FOR INJURY TO PERSONS OR DAMAGE TO VEHICLES AND OTHER PROPERTY CAUSED BY THE INCORRECT AND UNAUTHORISED USE OF THE LIFT.

During lift and descent movements, the operator must remain in the command station as defined in figure 8. The presence of persons inside the danger zone indicated in the same figure is strictly prohibited. The presence of persons beneath the vehicle during operations is permitted only when the vehicle is parked in the elevated position.

DO NOT USE THE LIFT WITHOUT PROTECTION DEVICES OR WITH THE PROTECTION DEVICES INHIBITED. FAILURE TO COMPLY WITH THESE REGULATIONS CAN CAUSE SERIOUS INJURY TO PERSONS, AND IRREPARABLE DAMAGE TO THE LIFT AND THE VEHICLE BEING LIFTED.

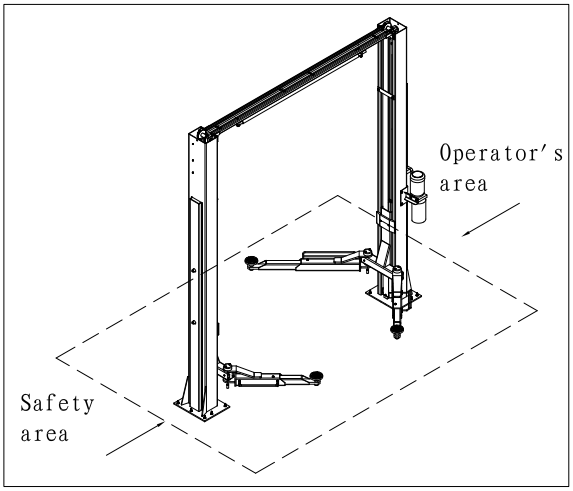

Fig. 8 Working Area

3.1 GENERAL PRECAUTIONS

The operator and the maintenance fitter are required to observe the prescriptions of accident prevention legislation in force in the country of installation of the lift.

Furthermore, the operator and the maintenance fitter must:

• Always work in the scheduled working area as shown in the manual;

• Never remove or deactivate the guards and mechanical, electrical, or other types of safety devices;

• Read the safety notices affixed to the machine and the safety information in this manual.

In the manual all safety notices are shown as follows:

DANGER: indicates imminent danger that can result in serious injury or death.

WARNING: indicates situations and/or types of maneuvers that are unsafe and can cause injuries of various degrees or death.

CAUTION: indicates situations and/or types of maneuvers that are unsafe and can cause minor injury to persons and/or damage the lift, the vehicle or other psaltery.

3.2 RISKS OF ELECTRIC SHOCK

Specific safety notice affixed to the lift in areas where the risk of electric shock is particularly high.

3.3 RISKS AND PROTECTION DEVICE

We shall now examine the risks to which the operator and the maintenance fitters may be exposed when the vehicle is immobilized in the raised position, together with the protection devices and adopted by the manufacture to reduce all such hazards to the minimum.

3.4 LONGITUDINAL AND LATERAL MOVEMENT

Longitudinal movement is considered the backward and forward shifting of the load.

Lateral movement implies the shifting to the left or right of the vehicle, especially during the lifting phase on the rack.

These movements can be avoided by positioning the vehicle correctly on the arm disk support plates, which must be previously adjusted to the same height (by loosening or tightening) as the vehicle.

Do not move the vehicle in relation to the arms or adjust arms and disk support plates until the arms have been totally lowered, i.e. the disk support plates must be free from all contact with the vehicle.

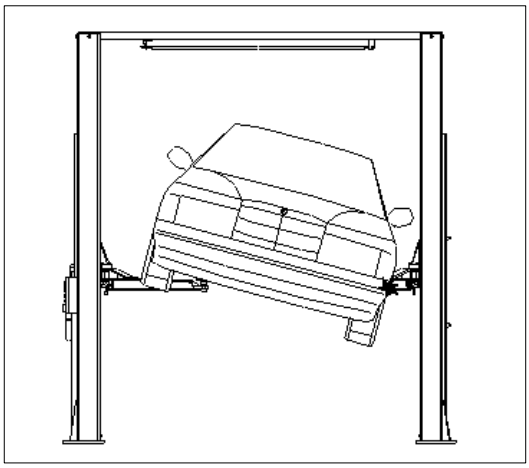

Fig. 9 Risk of Vehicle Fall

WARNING

DO NOT ATTEMPT TO MOVE THE VEHICLE WHEN IT IS RESTING ON THE DISK SUPPORT PLATES.

It is important to position the vehicle on the lift so that the weight is correctly distributed on the arms. (Fig. 10) For person and equipment safety, it is important that:

• People rest inside the safety area while the vehicle raising. (Fig. 8)

• The engine is off, the clutch engaged and the parking brake pulled.

• The vehicle is correctly positioned. (Fig. 10)

• Only authorized vehicle (Fig. 6 & Fig. 7) are raised without exceeding the rate capacity and overall dimensions.

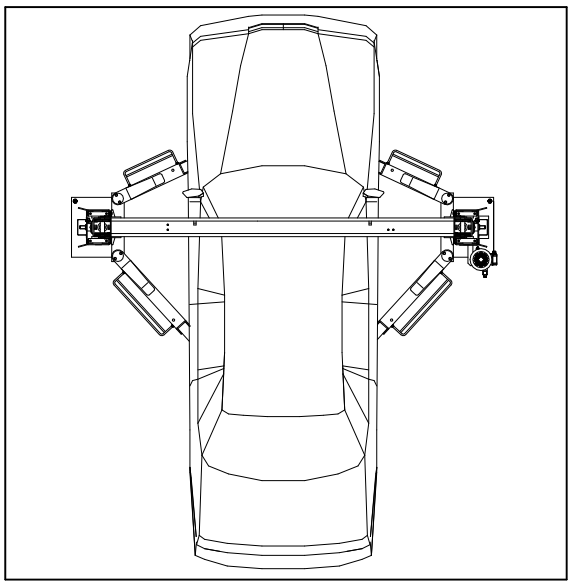

Fig. 10 Correctly Loaded Vehicle

3.5 RISKS WHILE THE VEHICLE IS BEING RAISED

The following safety devices have been installed to protect against overweight conditions and equipment failure:

• The thermal relay in the electric box will trip if the motor is overloaded.

• The maximum pressure valve (Fig. 11), located on the hydraulic oil power unit, will trip if the lift is overloaded.

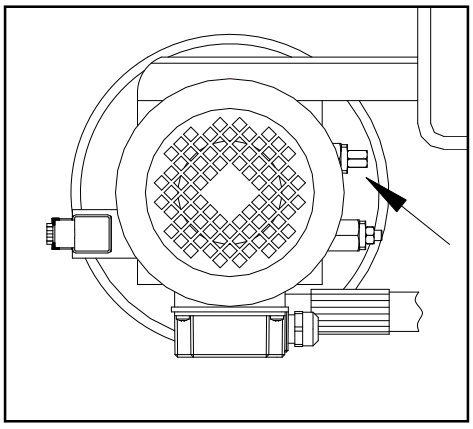

Fig. 11

• In case of a sudden, great leakage in the hydraulic circuit (a broken pipe), the blocking valves, at the bottom of each Cylinder, will trip. (Fig. 12)

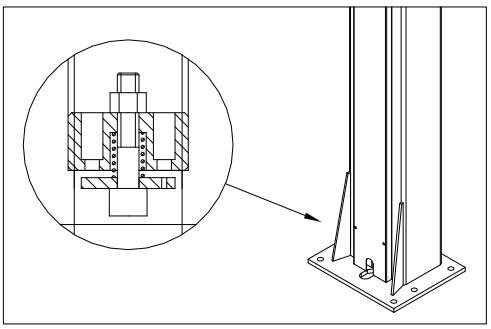

Fig. 12

• If the lift reaches to the maximum height, the up limit switch will stop the lifting. (Fig.13)

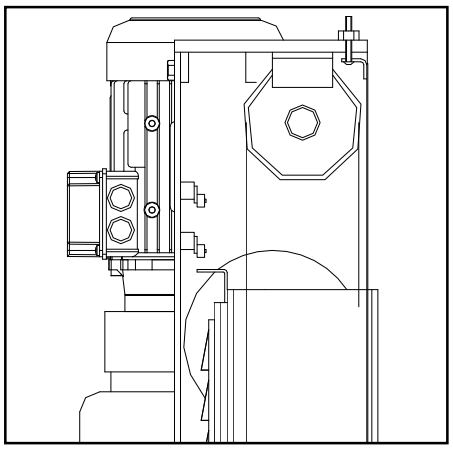

Fig. 13

• Keep both cables in balance during raising or lowering. (Fig. 14)

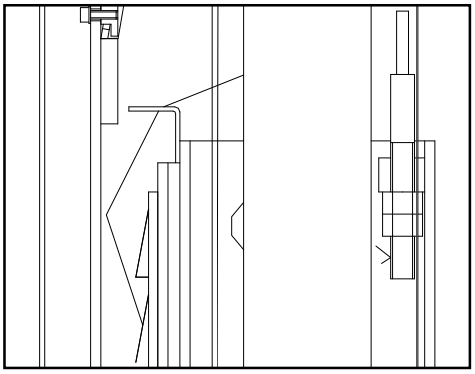

Fig. 14

• If the hydraulic cylinder breaks, the safety wedges will trip (Fig. 15), located inside the posts. The wedges are pushed by the spring and immediately stop the carriage preventing their descent.

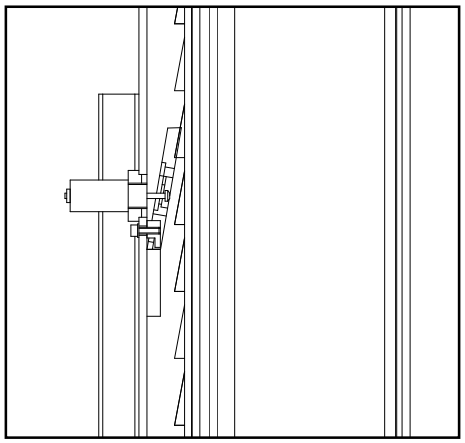

Fig. 15

• If the moving part exceed its travel distance, on the upper part of the command post there is two limit switches connected in series and are usually set working by the “actuator” (Fig. 13) on the command side carriage. If the first limit switch did not work, the second one would trip after 3sec of carriage run.

• In case of total breakdown of the limit switches, the carriage will stop a few millimeter higher. Because the hydraulic cylinders come to end stroke, will cause the maximum pressure valve (on hydraulic unit) to trip.

3.6 RISKS OF PERSONS

This paragraph illustrates risks to which the operator, maintenance worker, or any person near the operating area of the lift may be exposed in the case of use [the original phrase “impeccable use” is unclear] of equipment.

3.6.1 RISK OF CRUSHING (OPEARATOR)

Possible if the operator controlling the lift is not in the specified position at the command panel. When the platform and the vehicle are descending, the operator must never be partly or completely underneath the moving structure. During this phase, the operator must remain in the command zone. (Fig. 16)

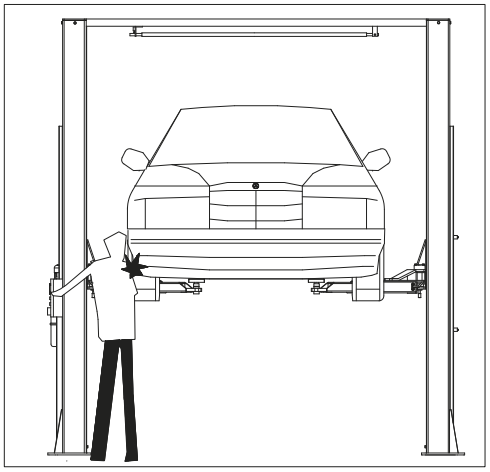

Fig. 16

3.6.2 RISK OF CRUSHING (PERSONNEL)

When the platform and the vehicle are descending, personnel are prohibited from entering the area beneath the moving parts of the lift. (Fig. 17) The lift operator must not start the maneuver until it has been clearly established that there are no persons in potentially dangerous positions.

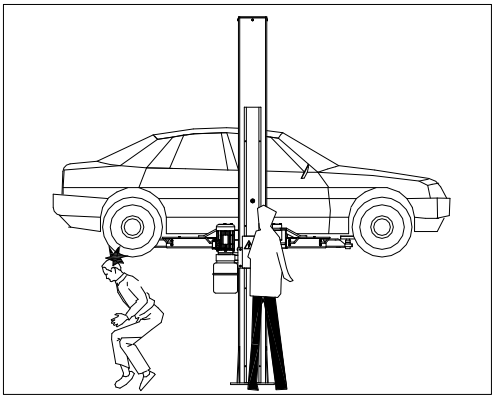

Fig. 17

3.6.3 RISK OF IMPACT

Caused by the parts of the lift or the vehicle that are positioned at head height. When, due to operational reasons, the lift is immobilized at relatively low elevations (less than 1.75m from the ground) personnel must be careful to avoid impact with parts of the machine not marked with special hazard coloring. (Fig. 18)

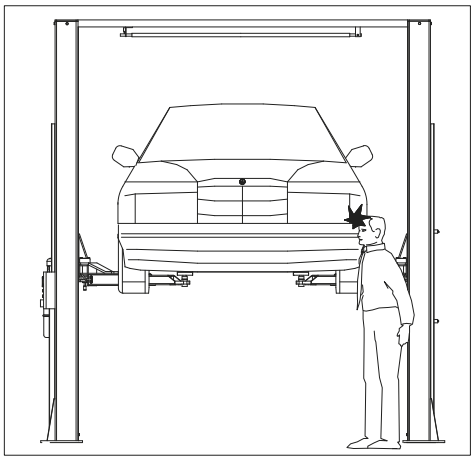

Fig. 18

3.6.4 RISK DUE TO VEHICLE MOVEMENT

Movement may be caused during operations, which involve force sufficient to move the vehicle. (Fig. 19) If the vehicle is of considerable dimensions or weight, movement may lead to overload or unbalancing. All measures must be taking to avoid such an occurrence.

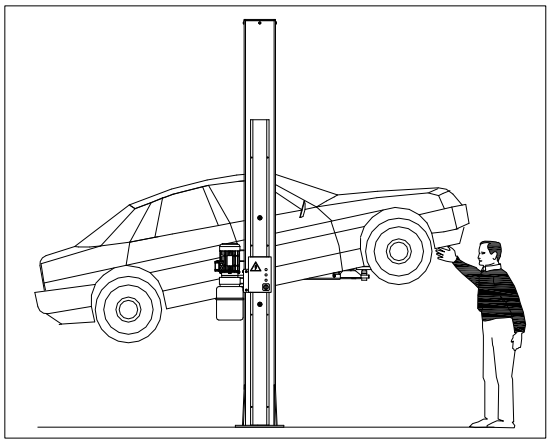

Fig. 19

3.6.5 RISK OF VEHICLE FALLING FROM LIFT

This risk could be caused by the incorrect positioning on the arm disk support plates (Fig. 20) or in incorrect position of the arm disk support plates in relation to the lift.

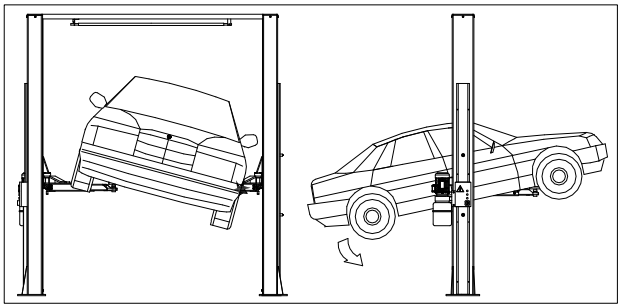

Fig. 20

NEVER BOARD THE VEHICLE AND/OR TURN THE ENGINE ON WHEN LIFT IS RAISED. (Fig. 21)

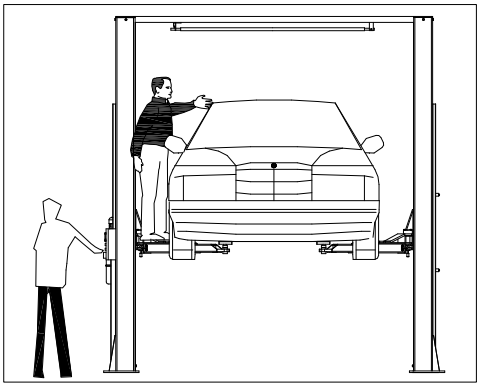

Fig. 21

NEVER LEAN OBJECTS AGAINST THE POSTS OR LEAVE THEM IN THE AREA WHERE MOVING PARTS ARE LOWERED.

This could hamper lowering or cause the vehicle to fall from the rack. (Fig. 22)

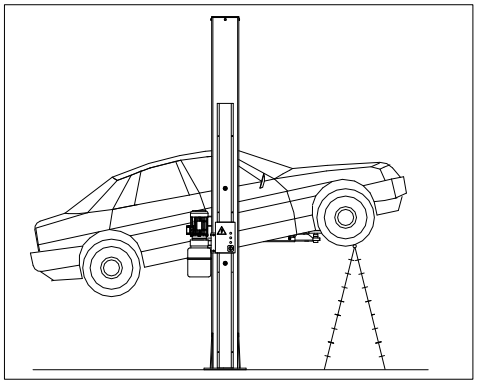

Fig. 22

3.6.6 SLIPPING

This risk may arise due to spillage of lubricants in the surrounding area. (Fig. 23)

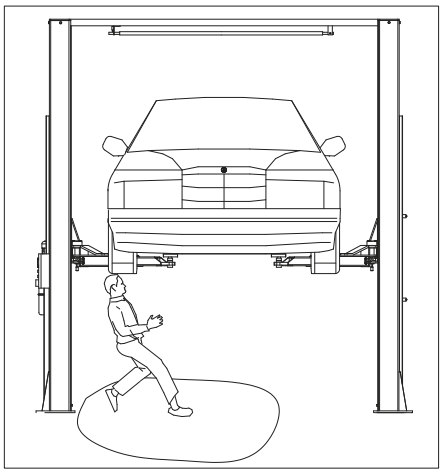

Fig. 23

ALWAYS KEEP THE AREA SURROUNDING AND THE LIFT CLEAN BY REMOVING ALL OIL SPILLS.

To avoid the risk of slipping, make use of the recommended personal protection (anti-slip footwear).

3.6.7 RISK OF ELECTRIC SHOCK

Risk of electric shock in areas of the lift housing electric wiring. Do not use jets of water, steam (high pressure wash units), and solvents or paint in the immediate vicinity of the lift, and take special care to keep such substances clear off the electrical command panel. (Fig. 24)

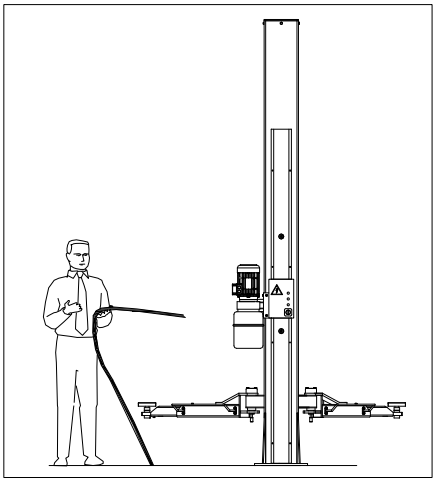

Fig. 24

3.6.8 RISK OF COMPONENT FAILURE DURING OPERATION

The manufacturer has used appropriate materials and construction techniques in relation to the specified use of the machine in order to manufacture a reliable and safe lift. Note, however, that the lift must be used in conformity with the manufacturers prescriptions and the frequency of inspections and maintenance work recommended in Chapter 6 “MAINTENANCE” must be observed.

3.6.9 RISK RELATED TO IMPROPER USE

Persons are not permitted to stand or sit on the platforms during the lift maneuver or when the vehicle is already lifted. (Fig. 25) All uses of the lift other than the uses for which it was designed are liable to give rise to serious accidents involving the persons working in the immediate vicinity of the unit. It is therefore essential to adhere scrupulously to all regulations regarding use, maintenance and safety contained in this manual.

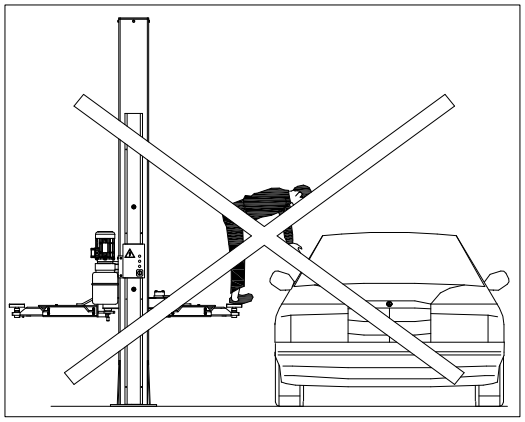

Fig. 25

3.7 SAFETY INSTRUCTINS FOR SERVICING

• Maintenance or repair work by authorized service personnel only.

• Turn off and padlock the main switch before doing any maintenance, or repair work.

• Work on pulse generators or proximity switches by authorized service personnel only.

• Work on the electrical equipment by certified electricians only.

• Do not replace or override the safety devices.

• Ensure that ecologically harmful substances are disposed of only in accordance with the appropriate regulations.

THE FOLLOWING OPERATIONS MUST BE PERFORMED EXCLUSIVELY BY SPECIALISED TECHNICAL STAFF WITH AUTHORISATION FROM THE MANUFACTURER OR LICENSED DEALER. IF THESE OPREATIONS ARE PERFORMED BY OTHER PERSONS, SERIOUS PERSONAL INJURY AND/OR IRREPARABL DAMAGE TO THE LIFT UNIT MAY RESULT.

4.1 INSTALLATION REQUISITE CHECKLIST

The lift is designed for installation in enclosed areas suitably protected from the weather. The place of installation must be well clear of areas destined to washing or painting, and away from solvent or paint storage areas or areas where there is a risk of potentially explosive atmosphere.

SUITABILITY OF THE DIMENSIONS OF THE PLACE OF INSTALLATION AND SAFETY CLEARANCE.

The lift must be installed in observance of the clearances between walls, pillars, other machines, etc. indicated in Fig. 26 and incompliance with any legislative requirements in the country of installation.

Check in particular:

• Minimum height: 5000mm inclusive of height of vehicle, maximum height of arms, (i.e. 1900mm), and upper post height (i.e. 2828mm)

• Min. distance from walls: 600mm

• Min. working area: 700mm

• Area for command station

• Area for maintenance, access and emergency escape routes.

• Position in relation to other machines

• Proximity to power supply for trouble-free hook- up

Chapter 4 INSTALLATION

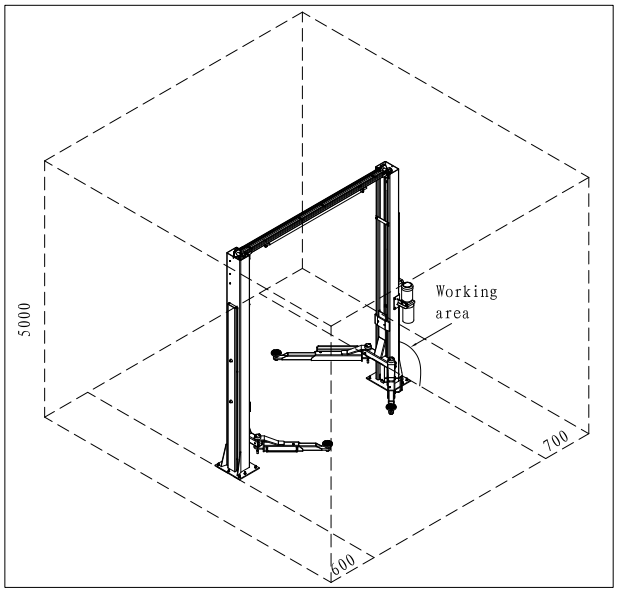

Fig. 26

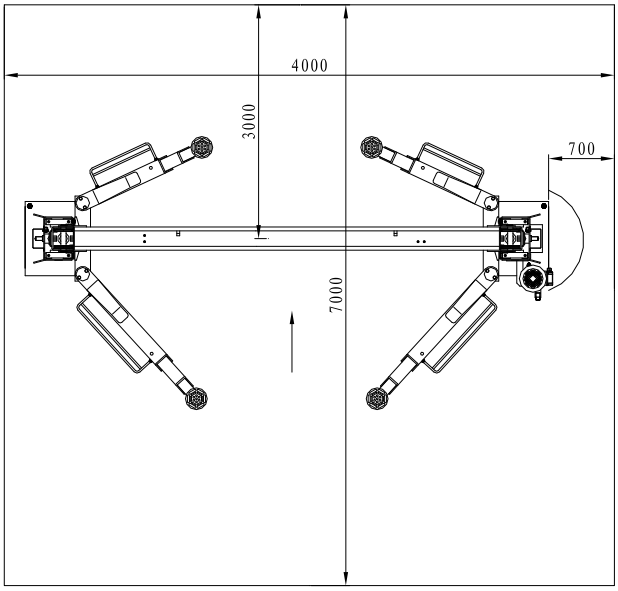

Fig. 27

4.2 LIGHTING

All parts of the machine must be uniformly lit with sufficient light to assure that the adjustment and maintenance operations specified in the manual can be performed, and without areas of shadow reflected light, glare and avoiding all situations that could give rise to eye fatigue.

The lighting must be installed in accordance with the laws in force in the place of installation (responsibility lies with the lighting equipment fitter).

4.3 FLOOR

The lift must be installed on a horizontal concrete bed with a minimum thickness of 200mm built and a resistance ≥30N/mm2.

The floor must also be flat and level (10mm of tolerance for leveling). Consult the manufacturer with regard to special applications.

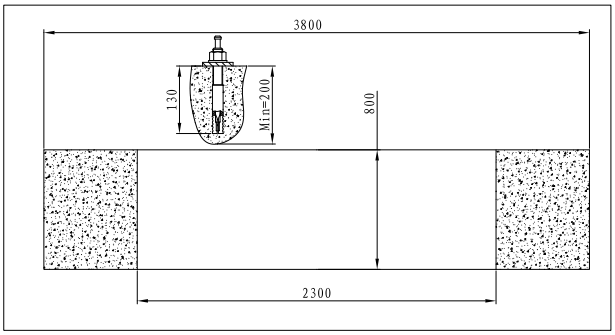

Fig. 28

4.4 ASSEMBLING

WARNING

DURING INSTALLATION ONLY AUTHORISED PERSONNEL IS ALLOWED.

To assemble the lift, the weight of the various parts is to be considered, in order to provide a lifting machine with the minimum capacity 500kg and max. lifting height of 2900mm.

Before starting to assemble the lift, check the crate contains all the needed material.

4.4.1 PUT CHASSIS

• Position the base plate of both column of which the open side should be inner side oriented. Make sure the distance from up to bottom should be 2760mm. The thickness of the spacer is over 300mm to ensure the operation of installing safety devices, cables, oil pipe and wire.

• Install safety devices, which including solenoid, self-locking board and hook according to Fig.33.

• Connect crossbeams to both columns to both columns to Fig. 34. (Notice that the limit switch is inside the main column.)

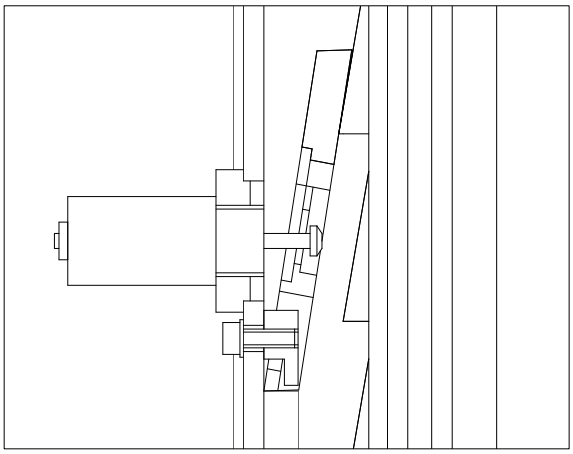

Fig. 33

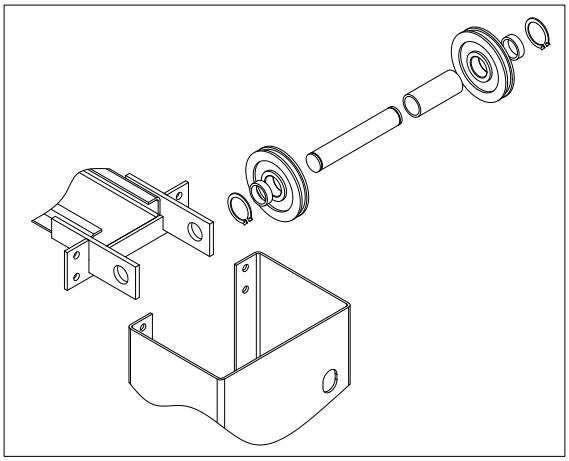

Fig. 34

• Install the safety bar according to fig.35 and fig.36.

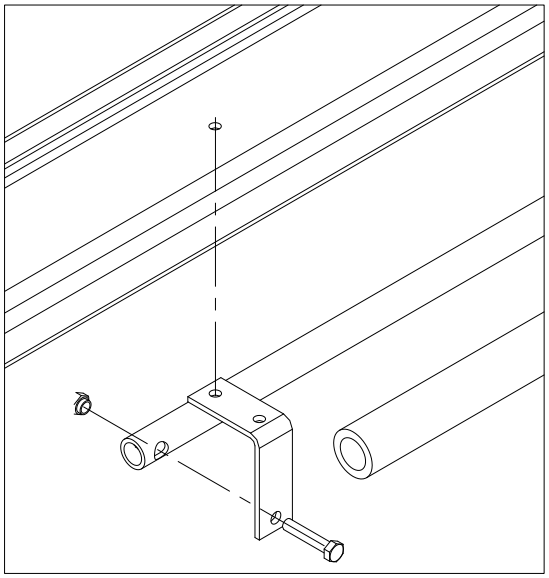

Fig. 35

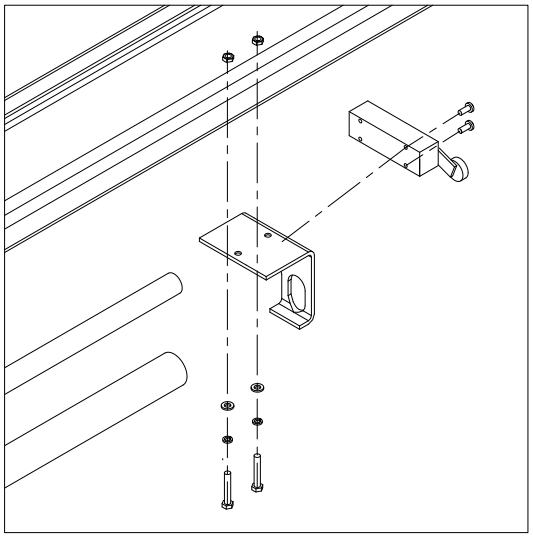

Fig. 36

• Install the synchronization cable according to fig.37.

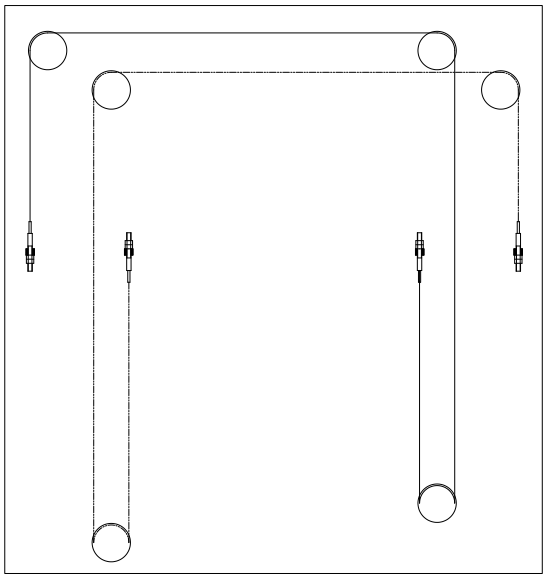

Fig. 37

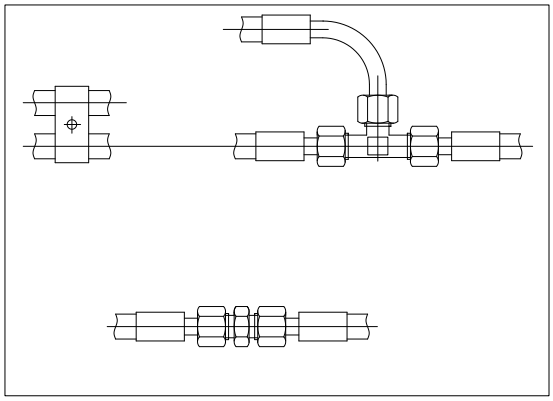

Fig. 38

• Connect the long hose inside both columns according to Fig. 40, tighten (upside connect to main column and the down side connect with sub-column), and then fix the oil pipe by using clip.

• Install the electrical box on the main column and then cross all the wires through holes and connect with limit switch and solenoid.

• Put up the main column (Notice that the carriage engages in the ratchet and keep in the same height). Adjust the uprightness of the column and install the expansion bolt according to Fig.32.

4.4.2 HYDRAULIC PLANT

• Install the pump on the support plate according to

Fig. 33 and fix it on the bottom of main column.

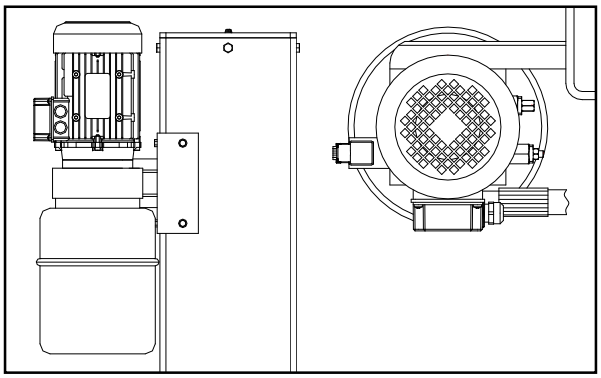

Fig. 33

• Connect the hydraulic unit to the circuit crossing with a flexible pipe. (Fig. 34)

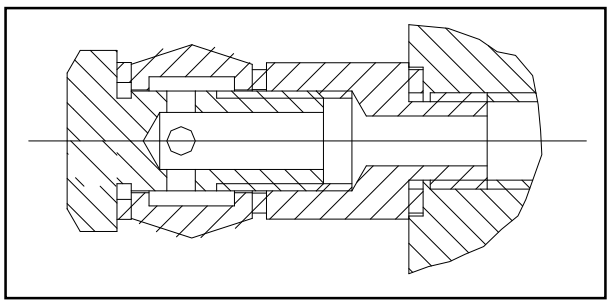

Fig. 34

• Tight all the fittings very well, even the one already mounted by the manufacturer.

• Fill the hydraulic unit tank with 8 liters of hydraulic oil ISO 32 as IP HYDRUS OIL 32, SHELL TELLUS OIL T32 or similar (See Chapter 2, TECHNICAL SPECIFICATIONS).

• Remove the oil filling cap and substitute it with the given drain cap.

4.4.3 ELECTRIC PLANT CONNECTION

WARNING

The operations listed below must be performed by skilled personnel.

4.4.3.1 Before connecting the electric system, make sure that:

• The power supply plant to the lift is equipped with the protection device required by current standards in the country where the machinery is installed.

• The power supply line has the following cross- section:

Lift voltage 400V, three-phase……Min. 2.5mm2

Lift voltage 230V, three-phase……Min. 4mm2

Lift voltage 230V, single-phase……..…Min. 6mm2

• The voltage oscillations are within the tolerance range set forth by the specifications.

The manufacturer supplies the rack to operate at 400V with a three-phase configuration; if the line voltage is different, the motor and transformer connection must be changed. (Fig. 35) It is also necessary to replace the thermal relay requesting that part from the manufacture and/or service center.

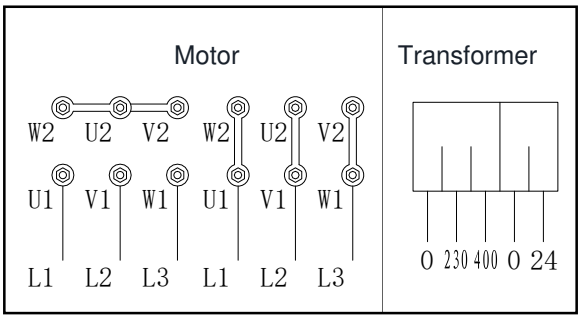

Fig. 35

4.4.3.2 Connect the power and control system to the terminal strip on the control box (Fig. 36), inserting the cable into the rack passing through the prepared hole and following the wiring diagram on Page 23.

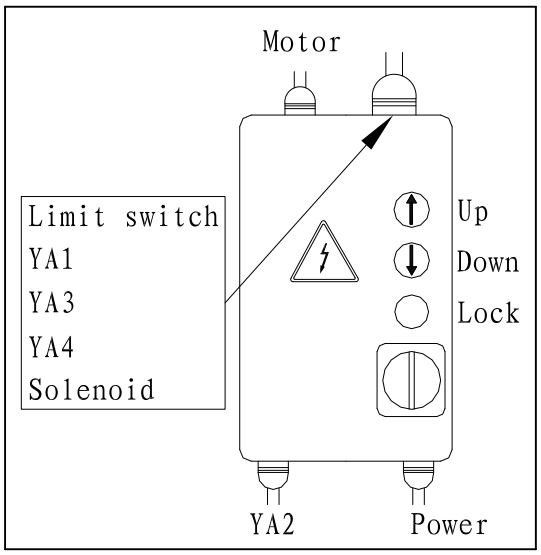

Fig. 36

• Install the electric box on the main column.

• Connect the limit switches.

• Complete the solenoid valve (on the hydraulic unit) connection.

• Connect the electromagnets.

• Connect the electric motor.

• Complete the voltage and command connections to the control panel clamp box.

4.4.3.3 The wires should be fixed by nylon pitch.

4.4.3.4 Close the cover of the electric box, turn the main switch to position 1, press the up push button (Fig. 36), the motor rotation direction should be the one shown by the arrow on the pump.

BEWARE: The pump rotating for a long time in the wrong sense may cause itself serious damages.

4.4.3.5 Make sure that the post end limit switches work properly by pressing them manually.

4.4.4 ARM ASSEMBLING

• Press the up push button, raise the carriages to a height of about 70cm off the ground, then press the lock push button, SET THE MAIN SWITCH (IG) TO POSITION 0 AND CUT OFF THE POWER SUPPLY TO THE LIFT.

• Grease the holes φ40 on the arms ends.

• Mount the arms into the carriage supports and insert the dowel pins into the support holes as shown in Fig. 37. Notice the entry of both arms is the same with the entry of the vehicle.

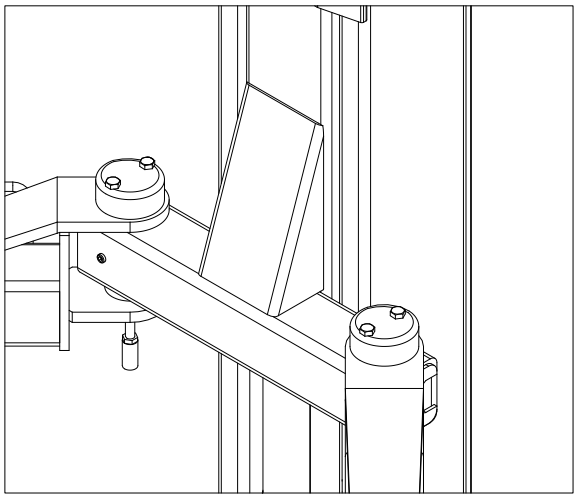

Fig. 37

• Block the spring ring at the end of the pin.

WARNING

The end user must ensure that the overload protection device is connected before the lift is connected to the electrical supply.

4.4.5 INSTALL ANCHOR BOLTS

• Make 14 drills on the basement with a helical concrete bit with a diameter of 18mm to a depth to 130mm. Use the basis pad as a drilling template.

• Install the screw according to Fig. 28.

4.5 TESTING AND CHECKS TO PERFORM BEFORE START-UP

4.5.1 MECHANICAL TESTS

• Attachment and tightness of bolts, fittings and connections

• Free sliding of moving parts

• Clean state of various parts of the machine

• Position of the protection device

• Arms blocking device

4.5.2 ELECTRIC TESTS

• Connection comply with diagrams

• Machine earth connections

4.5.3 OPERATING OF THE FOLLOWING DEVICES

• Rise limit switch

• Security device electromagnets

• Hydraulic oil plant solenoid-valve

4.5.4 HYDRAULIC OIL TEST

• Sufficient oil in the tank

• No leaks

• Cylinder operation

NOTE: If oil is not present, fill the reservoir of the power unit with the necessary amount of oil .See the procedure in Chapter 6: MAINTENANCE

4.5.5 ROTATION DIRECTION TEST

The motor should turn in the direction of the arrow located on the power unit pump; check using brief start-ups (each start-up must last a maximum of two seconds). If problems arise in the hydraulic oil plant, see the “Trouble-shooting” table in Chapter 7.

4.6 SET UP

WARNING

THESE OPERATIONS MUST ALWAYS BE PERFORMED BY TECHNICIANS OF THE AUTHORIZED SERVICE CENTRE INDICATED IN THE FRONT OF THIS MANUAL.

4.6.1 NO-LOAD TESTS

In this phase check the following:

• That the up, down and lock push buttons operate correctly;

• That the rack reaches the maximum height;

• That there are no abnormal vibrations in the posts and in the arms;

• That the safety wedges enter the iron pads under the carriage;

• That the rise limit switches trip;

• That the electromagnet trips;

• After having done all as previously recommended, the height difference between the arms of the two carriages, is less than 1cm. On the contrary, adjust their level by working on the counter nuts on the synchronous steel cables.

To perform the tests listed about, complete two or three complete up and down cycles. This is also to be done in order to make the air in the hydraulic circuit going out.

4.6.2 LOAD TESTS

Repeat the previous tests with the vehicle on the rack.

After the load tests, visually inspect the machinery and check again that all bolts are tightened.

Chapter 5 OPERATIONS AND USE

The lift Commands (control devices) is shown as Fig. 36.

5.1 COMMANDS

5.1.1 MAIN SWITCH (IG)

POSITION 0:

The lift is not energized. It is possible to access the interior of the box and lock the switch to prevent use of the lift.

POSITION 1:

This energizes the lift and lock the door of the box to prevent it from being opened accidentally.

5.1.2 UP PUSH BUTTON

“Man present” type, it operates under 24V and if pressed, activates the electric motor and mechanisms that lift the carriage.

5.1.3 DOWN PUSH BUTTON

“Man present” type, it operates under 24V and if pressed, activates the safety wedge electromagnets and the power unit exhaust valve.

5.1.4 LOCK PUSH BUTTON

“Man present” type, it operates under 24V and if pressed, activates the oil discharge electro-valve in the hydraulic power unit and it deactivates the electromagnets, placing the load in the parking position on the safety wedges.

5.2 OPERATING SEQUENCE

Position the lift arms in the hold points prescribed for the vehicle, adjusting the disks to the same height.

Each time the carriages are brought down to the ground, check the position of the disks under the chassis of the vehicle before raising the carriages again.

5.2.1 LIFTING

Turn the main switch (IG) to the position 1 and press the up push button until reaching the required height. As the carriages are raised the safety wedges are inserted automatically into each the iron pad under the carriage. Regarding lift limits and safety devices, see pages 6, 7 “RISKS WHILE THE VEHICLE IS BEING RAISED”.

5.2.2 PARKING

Once the required height has been reached, press the lock push button. The movement is stopped automatically when the safety wedge rests on the level of the first slot that they come in contact with while the carriages are coming down.

5.2.3 LOWERING

Before lowering the carriages, the safety wedges must be disconnected. Press the down push button that the carriage will be lift about 3-cm, then automatically releases the safety wedges and activates the down electro-valve. Lowering speed is regulated by the “flow regulating valve” in the pump. Lowering stops when the hydraulic cylinders are completely unloaded. When the carriages are totally lowered, the automatic arm-blocking device opens and permits rotation [the original refers to rotation of the carriages].

Chapter 6 MAINTENANCE

6.1 PRECAUTIONS

WARNING

Maintenance must be carried out ONLY BY SKILLED PERSONNEL WHO ARE VERY FAMILIAR WITH THE LIFT.

When performing maintenance on the lift, follow all the necessary precautions to PREVENT THE LIFT FROM BEING STARTED ACCIDENTALLY:

• The main switch on the control box must be locked in POSITION 0 by using a LOCK.

• THE KEY for the lock must be kept by the MAINTENANCE FITTER.

• While maintenance is being performed on the machine, always keep in mind all the main possible risks and the safety instructions indicated in Chapter 3 “SAFETY RISK OF ELECTRIC SHOCK” at the machine power supply terminal strip.

DO NOT PERFORM MAINTENANCE ON OR LUBRICATE PARTS WHILE THEY ARE MOVING.

IMPORTANT

To ensure cable maintenance:

• Only use original spare parts and tools that are suitable for the job and in good condition;

• Follow the maintenance schedule indicated in the manual: these frequencies are indicative and must always be considered as general rules to be respected.

• Good preventive maintenance requires constant attention and continuous supervision on the machine. Quickly find the cause of any abnormalities such as excessive noise, overheating, leaking fluids, etc.

Special attention is required for:

• The condition of lifting parts (cylinder, power unit);

• Safety devices (micro switches, electromagnets and safety wedges)

To perform maintenance correctly, refer to the following documents supplied by the rack manufacturer:

• Complete functional diagram of the electric equipment and auxiliary equipment indicating the power supply connections;

• Hydraulic diagram with lists of parts and max. pressure values;

• Exploded drawings with the data needed to order spare parts;

• List of the possible causes of malfunctions and recommended solutions (Chapter 7 of the manual).

6.2 PERIODIC MAINTENANCE

6.2.1 OPERATION FREQUENCY

To keep the lift working at full efficiency, follow the indicated maintenance schedule. The manufacturer will not be responsible and will not honor the warranty as a result of non-compliance with the instructions indicated above.

NOTE

The frequency indicated refers to normal operating conditions. Different frequencies will apply to particularly severe conditions.

ALL MAINTENANCE OPERATIONS MUST BE PERFORMED WITH THE LIFT STOPPED AND THE MAIN SWITCH KEY LOCKED.

When after the machine has been installed, check:

• The tightness of the posts bases connection anchor bolts;

• The tightness of the beam to posts attachment screws;

• That the opposite carriages arms are at the same level;

• The power unit oil level. Add oil up to the right level, if necessary.

6.2.2 EVERY MONTH

HYDAULIC POWER UNIT

• Check the oil level, using the special dipstick, which is attached to the filler cap. If necessary, add oil through the cap to reach the required level. For the type of oil, see Page 3 “TECHNICAL SPECIFICATIONS”.

• After the first 40 hours of operation, check if the conveys or filter is clogged and the oil contamination level. (Clean the filter and replace the oil if there is a high contamination level).

HYDAULIC CIRCUIT

Check that there are no oil leaks in the circuit between the power unit and cylinder and in the cylinder itself. In this case, check the condition of the gaskets and replace them, if necessary.

6.2.3 EVERY 3-MONTH

HYDAULIC PUMP

Under normal operating conditions, check that there is no changes in the noise in the power unit pump and check that the relative bolts are properly tightened.

SYNCHRONOUS SYSTEMS

• Check the operating condition and efficiency of the safety devices (as described at pages 6, 7) and the wear on the safety wedges and relative hinge pins. Oil the pins on the safety wedges. In case of excessive wear, replace the safety wedges and/or pins.

• Use a torque wrench to check that the post bases anchor bolts screws are properly tightened to the ground as well as the connection bolts.

• Clean and lubricate the carriage side runners and guides.

• Check that all screws are tightened

• Check that the arm locking system works properly.

• Grease all the moving parts.

6.2.4 EVERY 6-MONTH

HYDRAULIC

Check the contamination or aging level of the oil. Contaminated oil is the main cause of malfunctions of the valves and leads to a brief service life of the gear pumps.

SYNCHRONOUS CABLE

Check the pulleys and pulley races conditions. Control the cable wear by checking diameter, possible broken wires, other damages or relevant changes. With a paintbrush grease the cable in order to avoid corrosion or breakage due to oxidation.

6.2.5 EVERY 12-MONTH

General check: visual inspection of all structural parts and mechanisms to guarantee that there are no problems or anomalies.

Electric plant: skilled electricians (contact the service center) should test the electric plant, including the motor of the power unit, cables, and limit switch and control box.

HYDRAULIC PLANT OIL

Replace the oil, following the instructions listed below:

• Lower the lift to the minimum height (on the ground)

• Make sure that the hydraulic cylinder is at the end of its travel

• Disconnect the power supply to the lift rack.

• Drain the oil from the hydraulic circuit, unscrewing the plug located at the bottom of the power unit reservoir.

• Close the drain plug

• Fill the power unit with oil through the plug located at the top of the power unit reservoir.

The oil must be filtered:

• Oil characteristics and types are reported in the technical specifications (Chapter 2, page 3)

• Close the filler plug

• Energize the lift rack

• Go through two or three up-down cycles (for a height about 20-30 centimeters) to insert oil into the circuit.

When changing the oil: use only recommend oil or the equivalent; do not use deteriorated oil that has been in the warehouse for an extended period of time. Oil should be disposed as indicated in appendix “A”, page 37.

AFTER EVERY MAINTENANCE OPERATION, RESTORE THE MACHINE TO ITS INITIAL CONDITION, INCLUDING ALL REMOVED GUARDS AND SAFETY DEVICES.

To ensure good maintenance, it is important:

• To use only tools that are suitable for the job and original spare parts

• Follow the minimum maintenance schedule as indicated

• Immediately find the cause of any abnormalities (excessive noise, overheating, leaking fluids, etc)

• Pay special attention to lifting parts (cylinders) and safety devices

• Use all the documentation supplied by the manufacturer (wiring diagrams, etc)

6.3 PERIODIC LUBRIFICATION CHART

Lubricate the rack as indicated in Fig.42. Grease must be taken from perfectly closed tins and/or well preserved. Old or damaged grease may damage the lubricated part.

Problem	Possible cause	Solution
The lift does not rise when the pushbutton is pressed (motor does not run)	Burnt fuse Line current does not arrive Malfunction in the electric plant: - Broken limit switch -burnt motor	Replace fuse Connect again Call Service Center
The lift does not rise when the pushbutton is pressed (motor runs)	Not enough oil Drain solenoid valve opened Max pressure valve working Leaks in the hydraulic circuit	Top up oil level Check electric connections or change it Take load down Repair the hydraulic circuit
Lift continues to rise after the up pushbutton is released	Faulty pushbutton	Disconnect the lift and call the service centre.
Lift does not descend	Foreign object Solenoid valve blocked Malfunction in the electric plant Carriages still lean on security devices Block valves have tripped	Remove object Change it (call Service Center) Call Service Center Make the correct descent sequence Repair the hydraulic circuit damage
The lift does not reach its maximum height	Not enough oil	Add oil to the power-unit tank.
After having released the up pushbutton, the lift stops and lowers slowly	Drain valve does not close because it is dirty Defective drain valve	At the same time set the rise and descent movements, to clean the valve Change (call Service Center)
The power unit motor overheats	Motor malfunction Wrong voltage	Call Service Center Check voltage
Power unit pump is noisy	Dirty oil Wrong assembling	Change oil Call Service Center
Oil leakage from cylinder	Damaged gaskets Dirt in the plant	Change the damaged gaskets Clean all parts Check the valves are not damaged

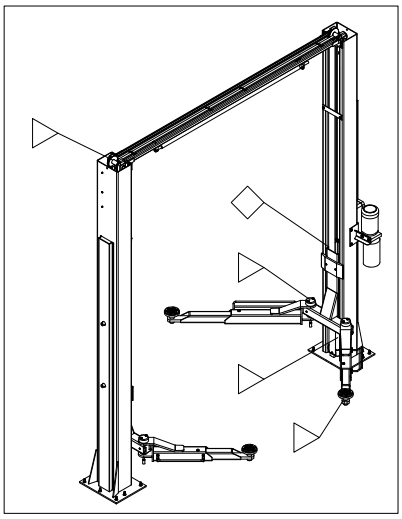

Fig. 38

△ Lubricate every three months

□ Lubricate every six months

Chapter 7 TROUBLESHOOTING

7.1 TROUBLESHOOTING GUIDE

Troubleshooting and possible repairs require absolute compliance with ALL THE SAFETY PRECAUTIONS indicated in Chapter 6 “MAINTENANCE” and Chapter 3 “SAFETY”.

7.2 POSSIBLE PROBLEMS AND SOLUTIONS

APPENDIX A SPECIAL NOTES

A.1 DISPOSAL OF USED OIL

Used oil, which is removed from the power unit and the plant during an oil change, must be treated as a polluting product, in accordance with the legal prescriptions of the country in which the lift is installed.

A.2 MACHINE DEMOLITION

DURING MACHINE DEMOLITION, COMPLY WITH ALL THE SAFETY PRECAUTIONS DESCRIBED IN CHAPTER 3, WHICH ARE ALSO VALID FOR ASSEMBLING.

The machine must be demolished by authorized technicians, just like for assembling. The metallic parts can be scrapped as iron. In any case, all the materials deriving from the demolition must be disposed of in accordance with the current standards of the country in which the rack is installed. Finally, it should be recalled that for tax purposes, demolition must be documented; submitting claims and documents according to the current laws in the country in which the rack is installed at the time the machine is demolished.

APPENDIX B

HYDRAULIC OIL HOSE CONNECTION DIAGRAM

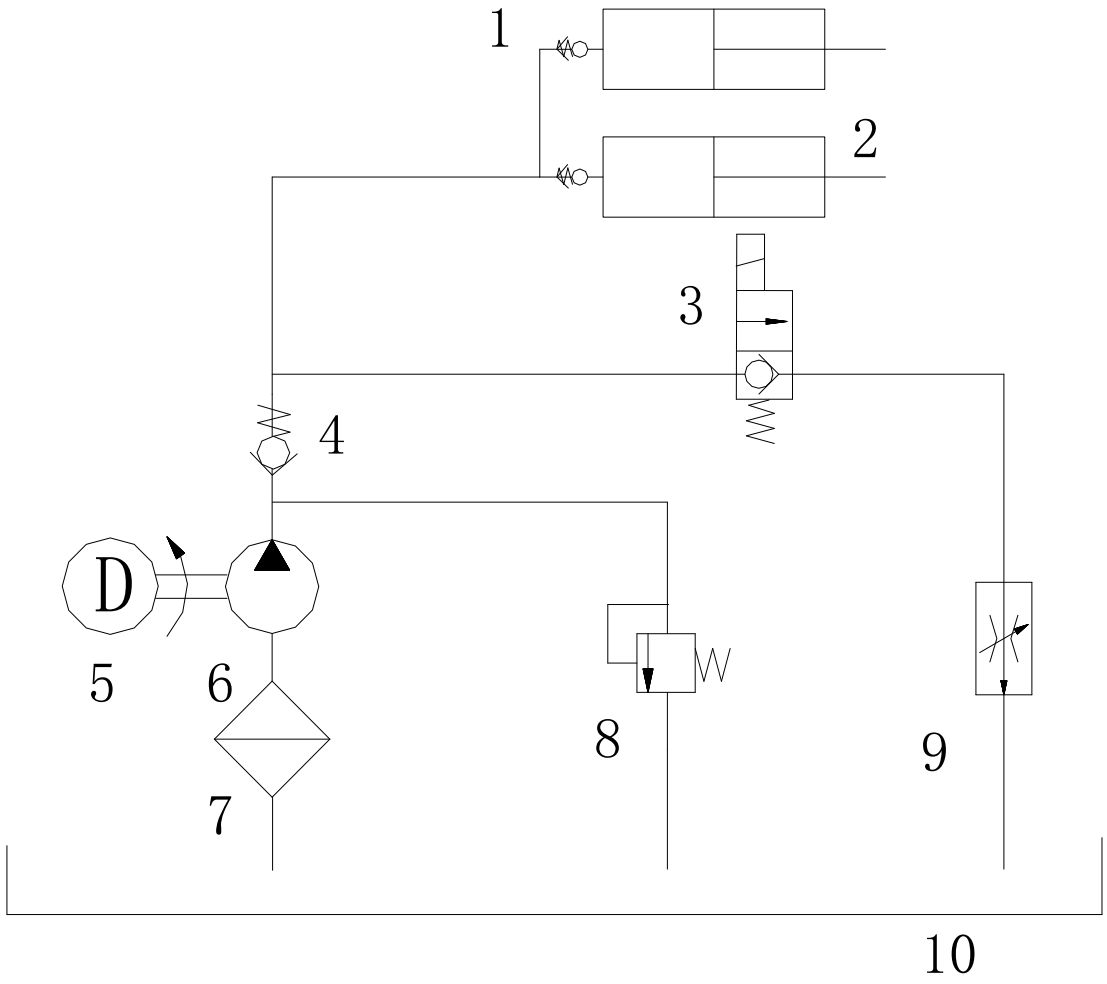

No.	Description
1	Lock valve
2	Single-acting operating cylinder
3	Solenoid directional valve
4	Check valve
5	Motor
6	Pump
7	Filter
8	Pressure relief valve
9	Flow control valve
10	Tank

APPENDIX C

ELECTRICAL WIRING DIAGRAM (380V/50Hz/3Ph)

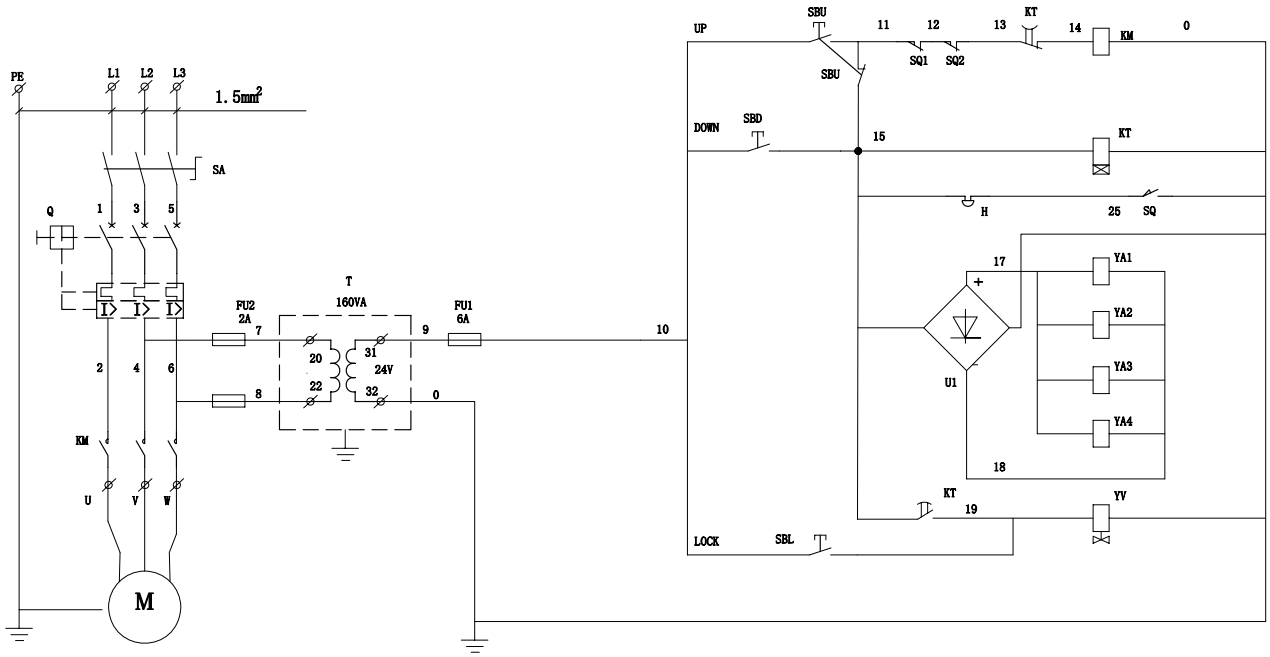

Ref.	Designation	Type and specifications	Qty
SA	Power switch	LW39-16RE04/2	1
Q	Circuit breaker	DZX2-60L 10/3	1
KM	AC contactor	CJX2-1210	1
M	Motor	90L4 | 3Phase/400V 2.2 kW *	1
KT	Time relay	ST3PA-C	1
SQ1	Limit switch	ME 8108	1
SQ2	Safety switch	ME 8104	1
SBL	Lock pushbutton		1
SBU	Up pushbutton		1
SBD	Down pushbutton		1
YA1-YA4	Electromagnet	DC 24V	4
YV	Solenoid valve	AC 24V	1
FU1/FU2	Fuse	RF1-32 (X) 1A/6A	3
T	Control transformer	JBK3-160 400V/24V	1
U1	Rectifier	+KBPC10-10-	1

* Motor: 2.2 kW, approved configuration. Original electrical protection and connection specifications remain unchanged; a qualified electrician must verify their suitability for the delivered configuration.

ELECTRICAL WIRING DIAGRAM (220V/50Hz/1Ph)

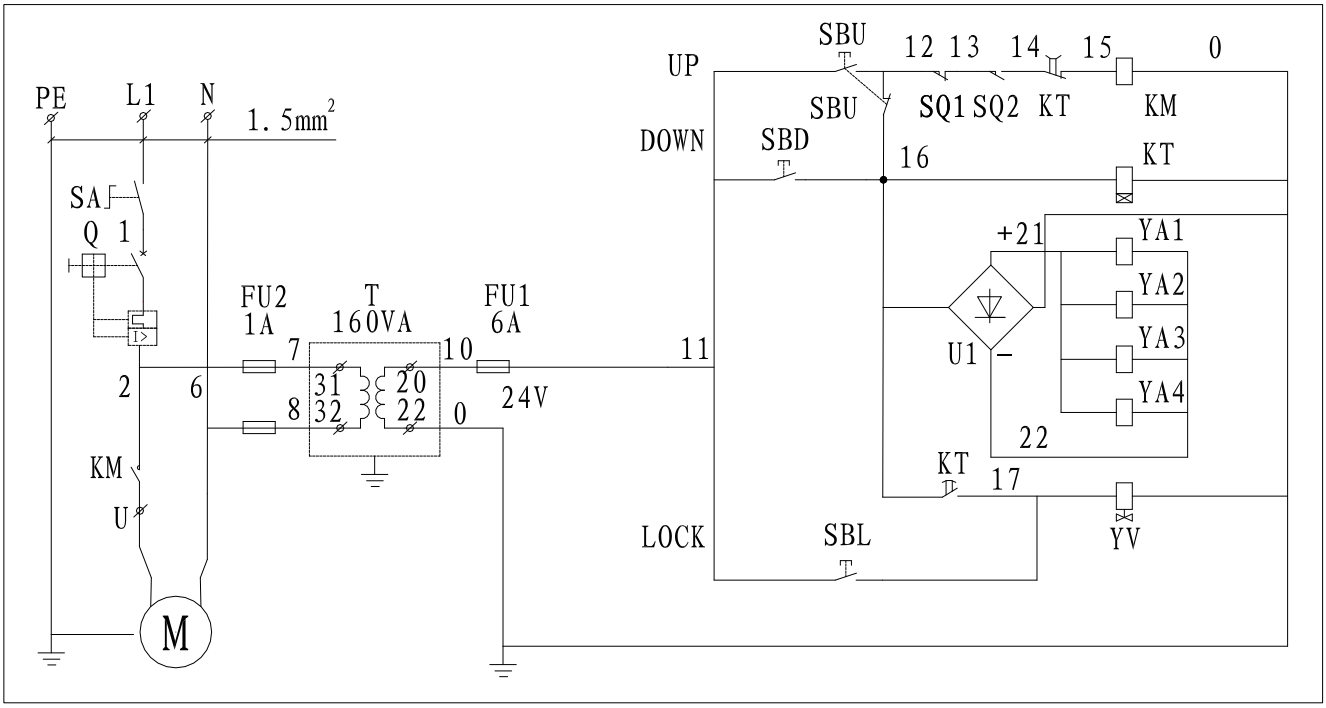

Ref.	Designation	Type and specifications	Qty
SA	Power switch	LW39-16RE04/1	1
Q	Circuit breaker	DZX2-60L 15/1	1
KM	AC contactor	CJX2-1210	1
M	Motor	90L4 | 1Phase/220V 2.2 kW *	1
KT	Time relay	ST3PA-C	1
SQ1	Limit switch	ME 8108	1
SQ2	Safety switch	ME 8104	2
SBL	Lock pushbutton		1
SBU	Up pushbutton		1
SBD	Down pushbutton		1
YA1-YA4	Electromagnet	DC 24V	4
YV	Solenoid valve	AC 24V	1
FU1/FU2	Fuse	RF1-32 (X) 1A/6A	3
T	Control transformer	JBK3-160 220V/24V	1
U1	Rectifier	+KBPC10-10-	1

* Motor: 2.2 kW, approved configuration. Original electrical protection and connection specifications remain unchanged; a qualified electrician must verify their suitability for the delivered configuration.

APPENDIX D SPARE PARTS

D.1 SPARE PARTS

When replacing parts and making repairs, comply with ALL THE SAFETY PRECAUTIONS described in Chapter 6 MAINTENANCE and in Chapter 3 SAFETY.

Take all the necessary precautions to AVOID ACCIDENTAL START-UP OF THE LIFT.

• The switch on the control box must be blocked in position 0 with a lock

• The key of the lock must be kept by the maintenance fitter during the maintenance operation.

D.2 PROCEDURE FOR ORDERING SPARE PARTS

To order spare parts:

• Indicate the serial number of the lift and the year built

• Indicate the code of the piece requested (see the CODE” columns in the tables)

• Indicate the quantity required.

The request must be submitted to the authorized reseller as indicated in the front of the manual.

D.3 SPAREPARTS LIST

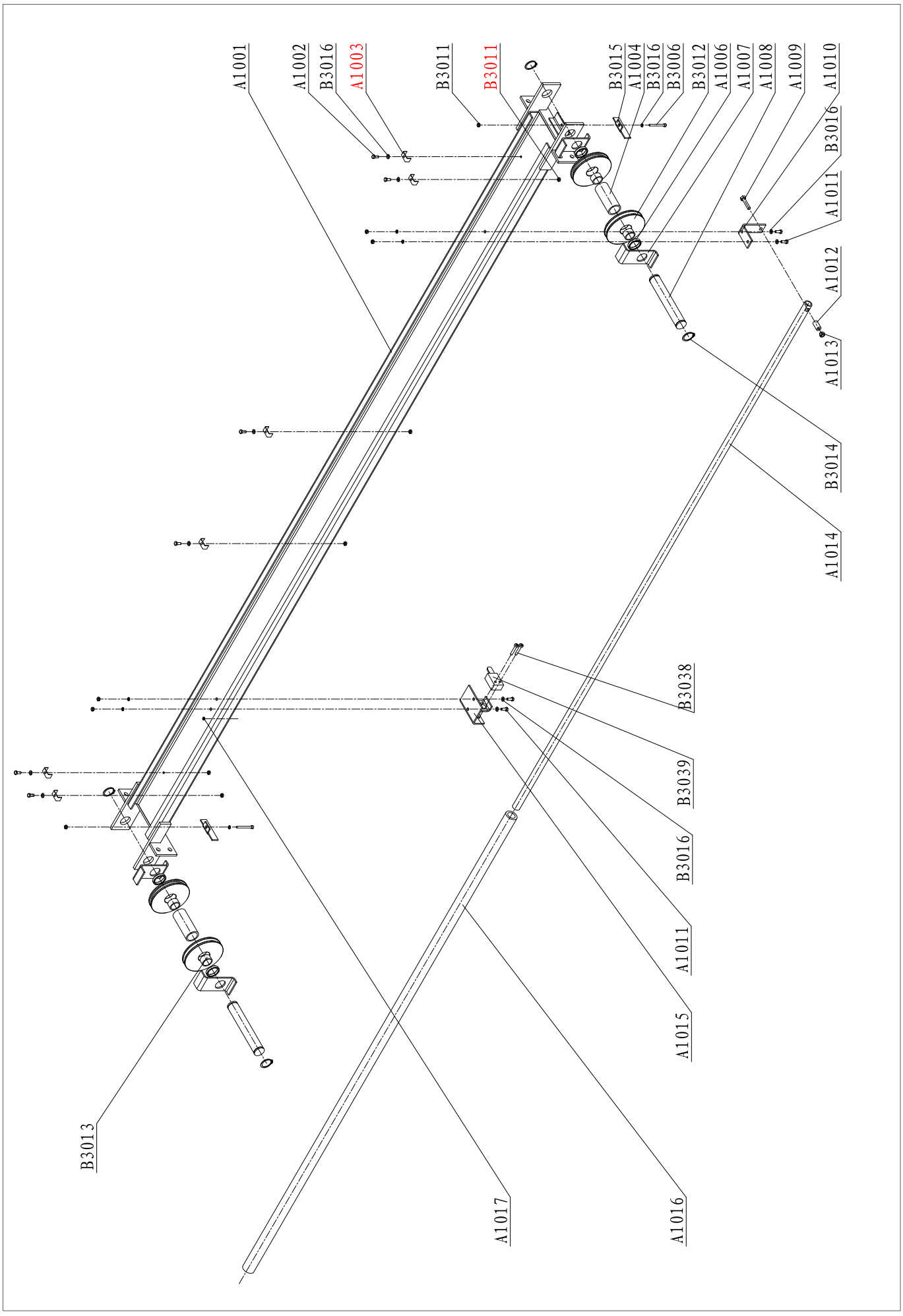
A1001
A1002
B3016
A1003
B3011
B3011
B3015
A1004
B3016
B3006
B3012
A1006
A1007
A1008
A1009
A1010
B3016
A1011
A1012
A1013
B3014
A1014
B3038
B3039
B3016
A1011
A1015
A1016
A1017
B3013

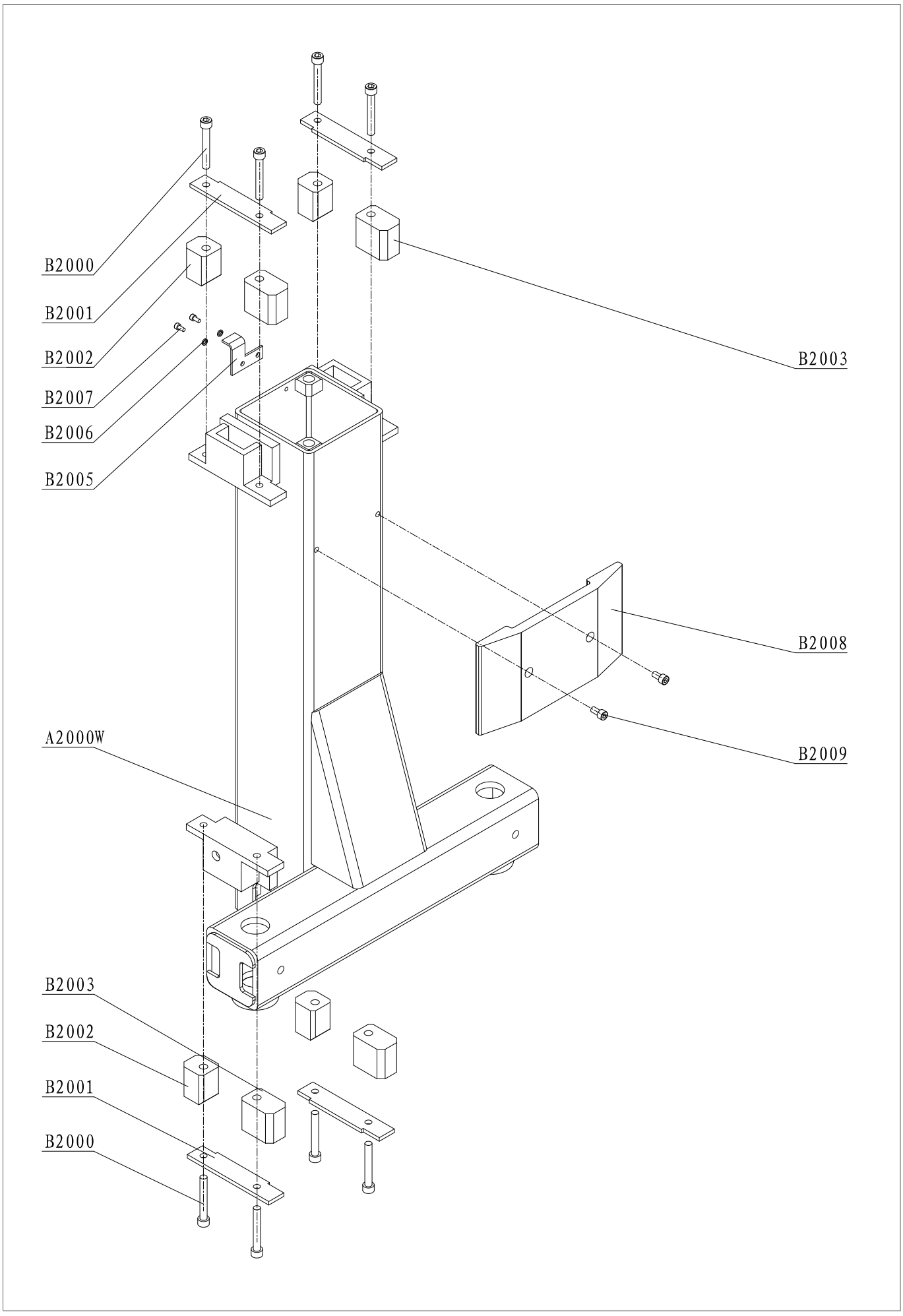
B2000
B2001
B2002
B2007
B2006
B2005
B2003
B2008
B2009
A2000W
B2003
B2002
B2001
B2000

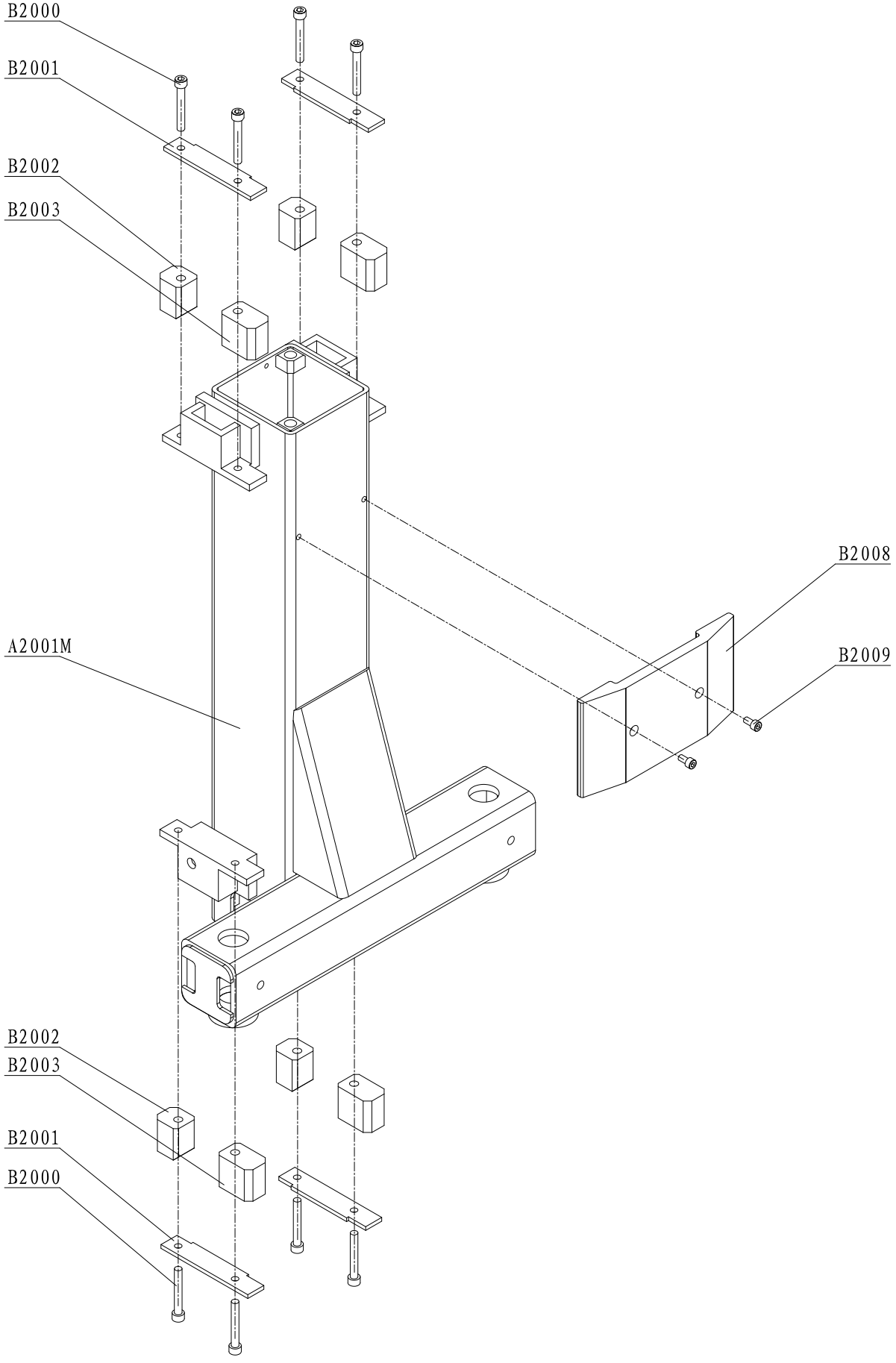
B2000
B2001
B2002
B2003
A2001M
B2008
B2009
B2002
B2003
B2001
B2000

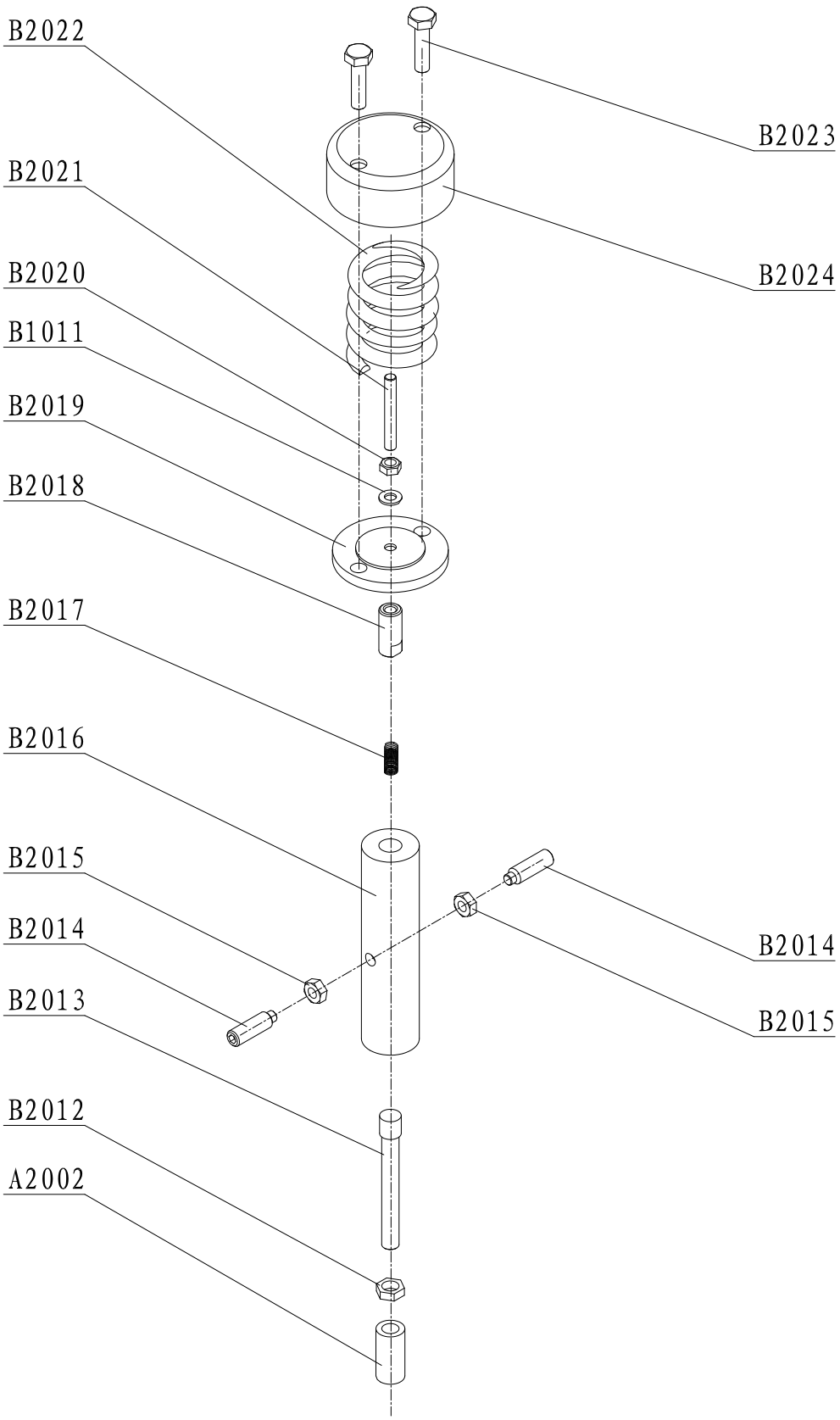
B2022
B2023
B2021
B2024
B2020
B1011
B2019
B2018
B2017
B2016
B2015
B2014
B2013
B2012
A2002
B2014
B2015

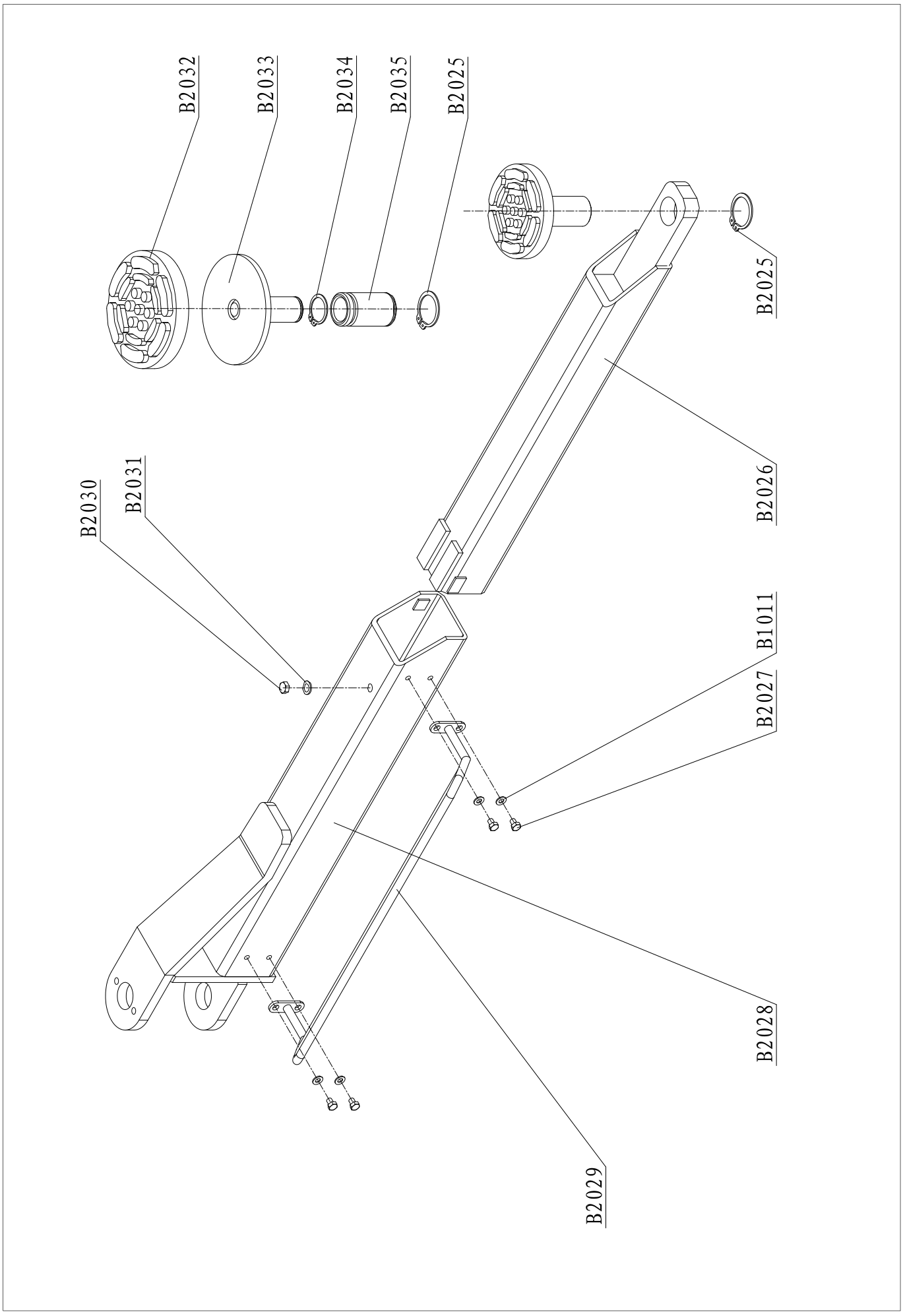
B2032
B2033
B2034
B2035
B2025
B2025
B2030
B2031
B2026
B1011
B2027
B2028
B2029

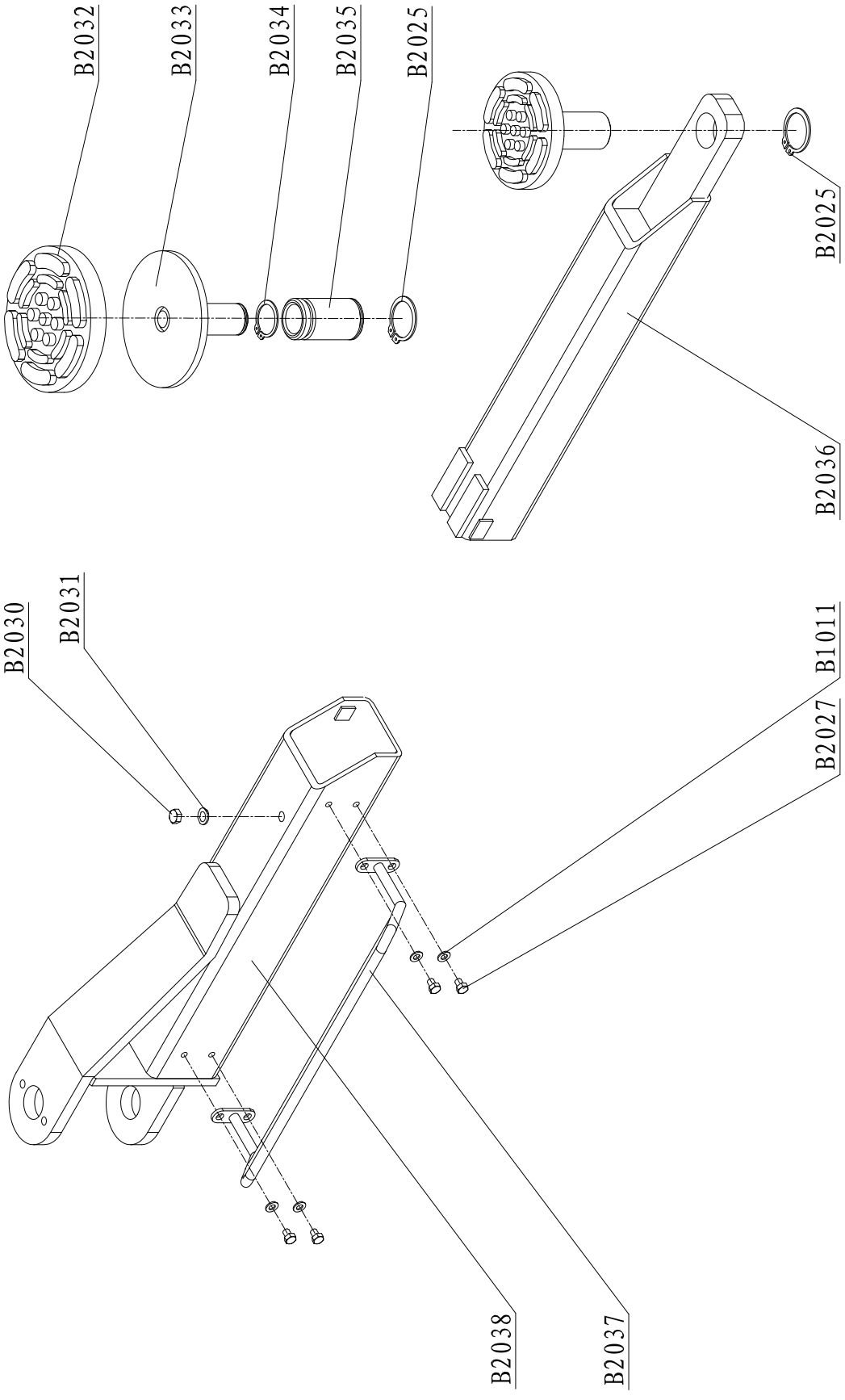
B2032
B2033
B2034
B2035
B2025
B2025
B2036
B2030
B2031
B2027
B1011
B2038
B2037

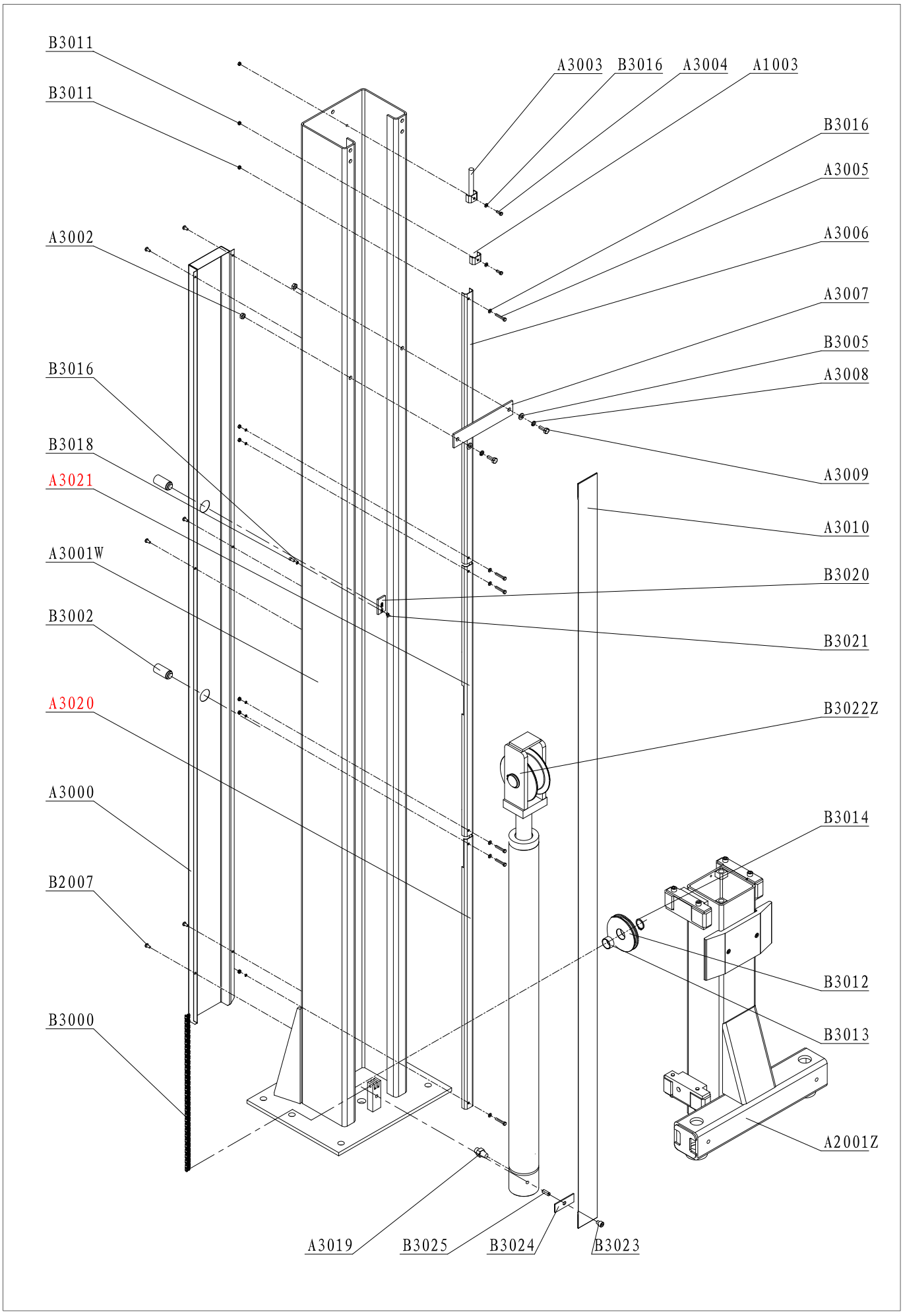
B3011
B3011
A3003
B3016
A3004
A1003
B3016
A3005
A3002
A3006
A3007
B3005
B3016
A3008
B3018
A3021
A3009
A3010
A3001W
B3020
B3002
B3021
A3020
B3022Z
A3000
B3014
B2007
B3012
B3013
B3000
A2001Z
A3019
B3025
B3024
B3023

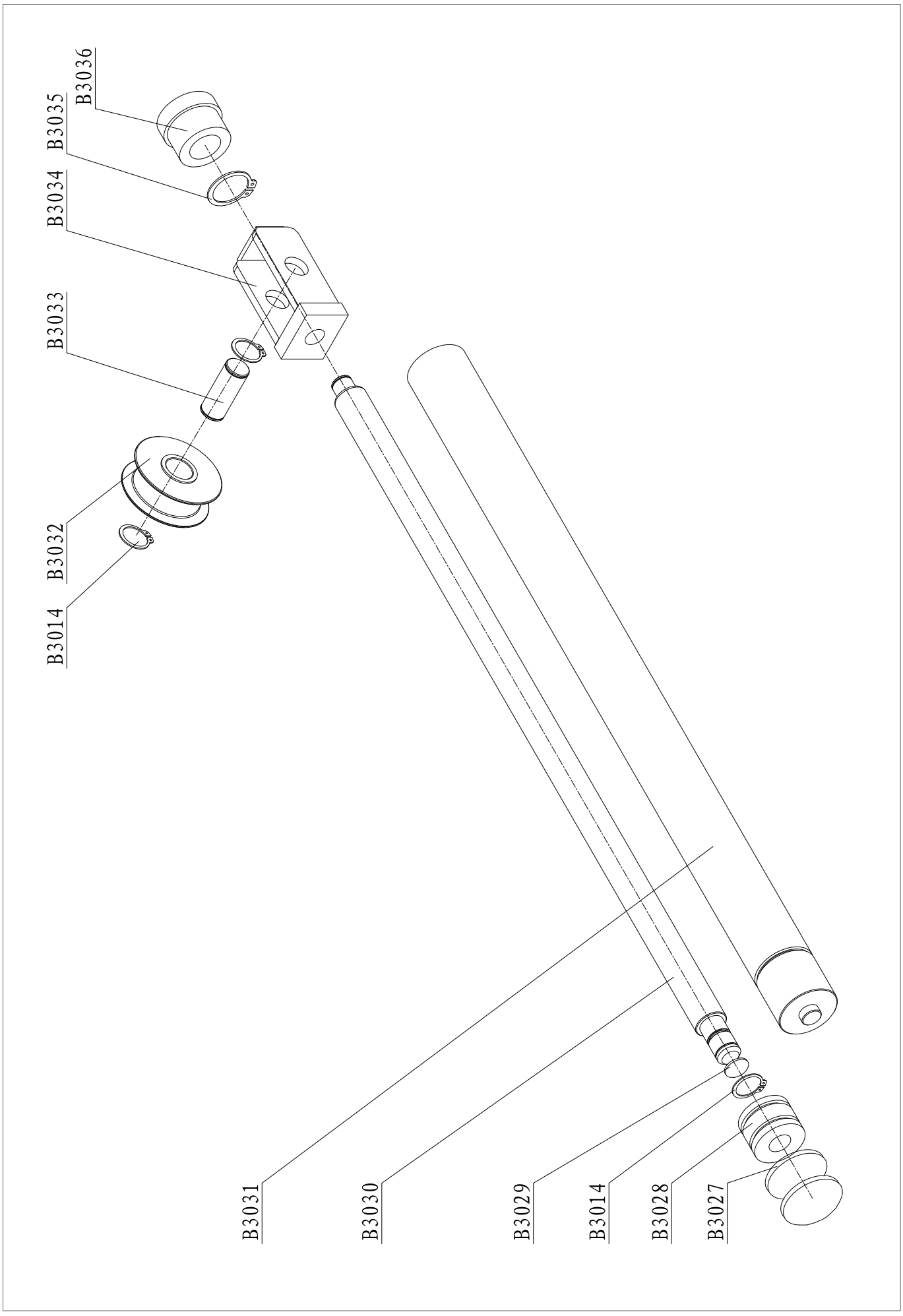
B3036
B3035
B3034
B3033
B3032
B3014
B3031
B3030
B3029
B3014
B3028
B3027

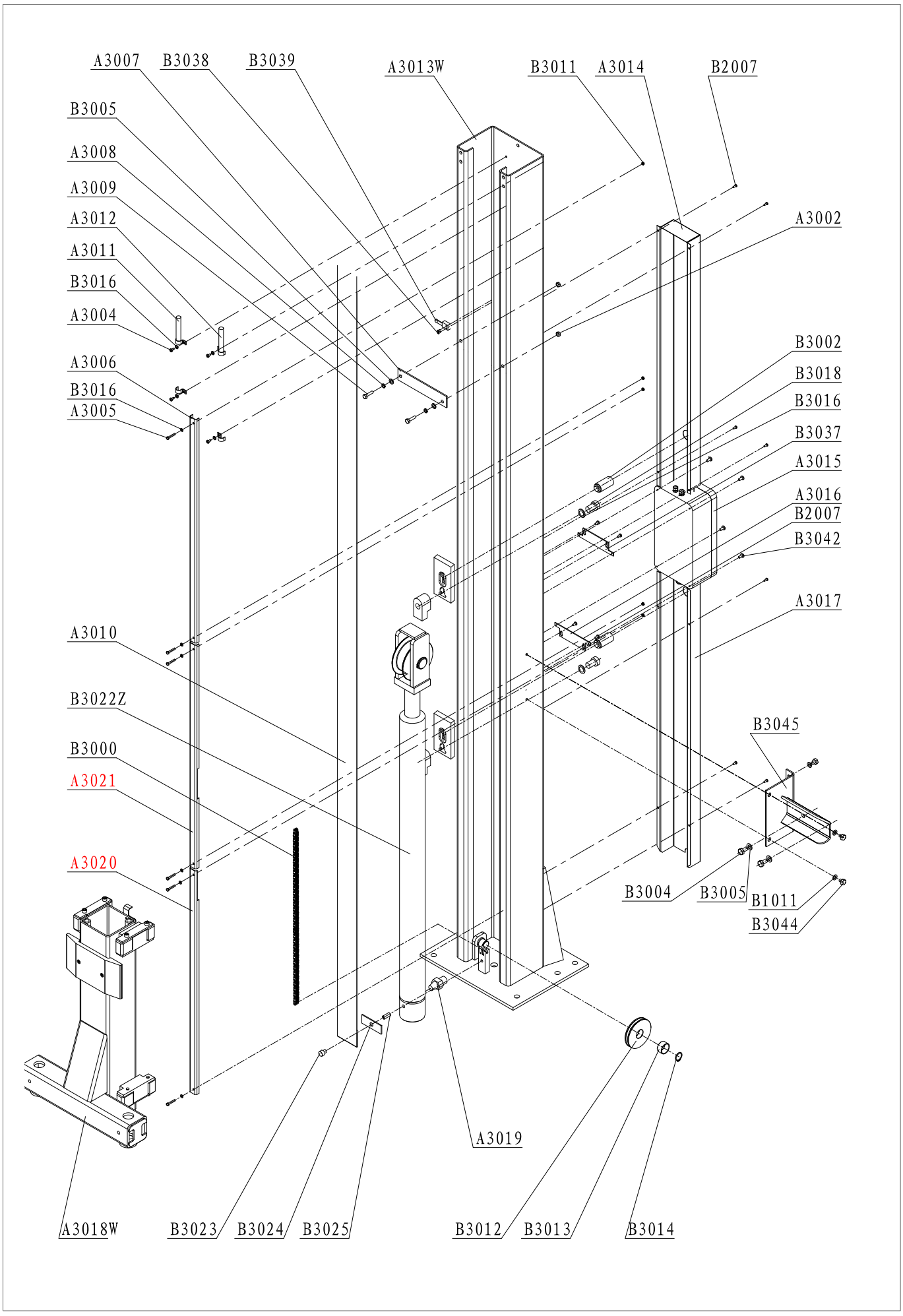
A3007
B3038
B3039
A3013W
B3011
A3014
B2007
B3005
A3008
A3009
A3012
A3011
B3016
A3004
A3002
A3006
B3016
A3005
B3002
B3018
B3016
B3037
A3015
A3016
B2007
B3042
A3017
A3010
B3022Z
B3000
A3021
A3020
B3045
B3004
B3005
B1011
B3044
A3019
A3018W
B3023
B3024
B3025
B3012
B3013
B3014

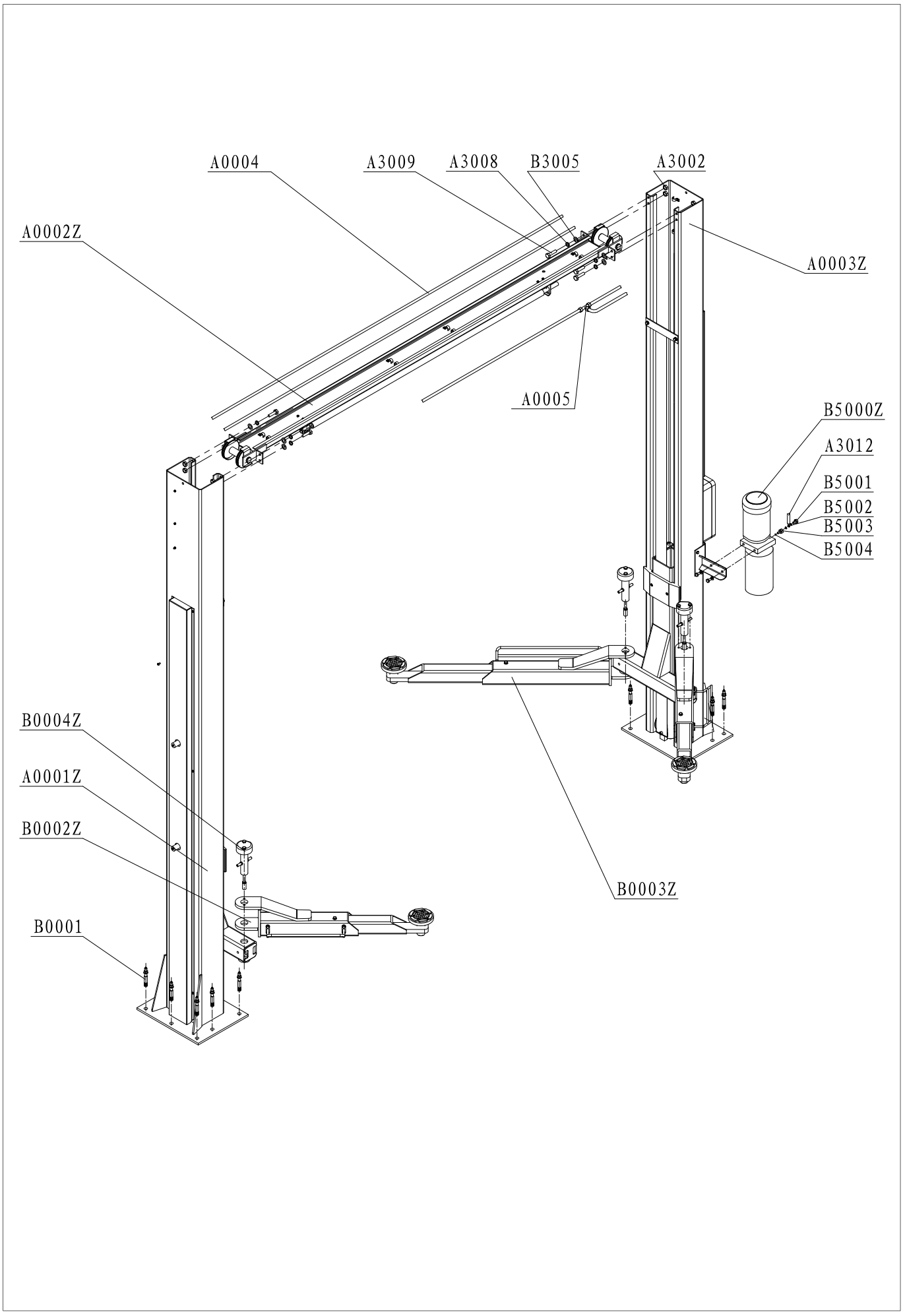
A0004
A3009
A3008
B3005
A3002
A0002Z
A0003Z
A0005
B5000Z
A3012
B5001
B5002
B5003
B5004
B0004Z
A0001Z
B0002Z
B0001
B0003Z

Contact and service

HAMMER TOOLS
Schnydersäcker 453
8262 Ramsen
Schweiz / Suisse / Svizzera / Switzerland

info@hammer-tools.ch
052 345 00 00

D.2 PROCEDURE FOR ORDERING SPARE PARTS

To order spare parts:

• Indicate the serial number of the lift and the year built

• Indicate the code of the piece requested (see the CODE” columns in the tables)

• Indicate the quantity required.

The request must be submitted to the authorized reseller as indicated in the front of the manual.

HAMMER TOOLS
CLD 4000 EH

Installation, Operation and Maintenance Manual

English edition

20.10.2026

Schnydersäcker 453, 8262 Ramsen
info@hammer-tools.ch | 052 345 00 00