HAMMER TOOLS

CSL 3500 XXU

Operating manual | English

Complete edition of the supplied manual. Sections identify their source pages; illustrations and controls follow the associated section. Technical identifiers are retained. Read all safety and operating instructions before use.

LOW-PROFILE HIGH-RISE SCISSOR LIFT

CSL 3500 XXU

Installation, operation and maintenance manual

Source version: HR2024.09.1.0

Read this manual before operation. Read and understand the safety precautions to protect yourself and avoid property damage.

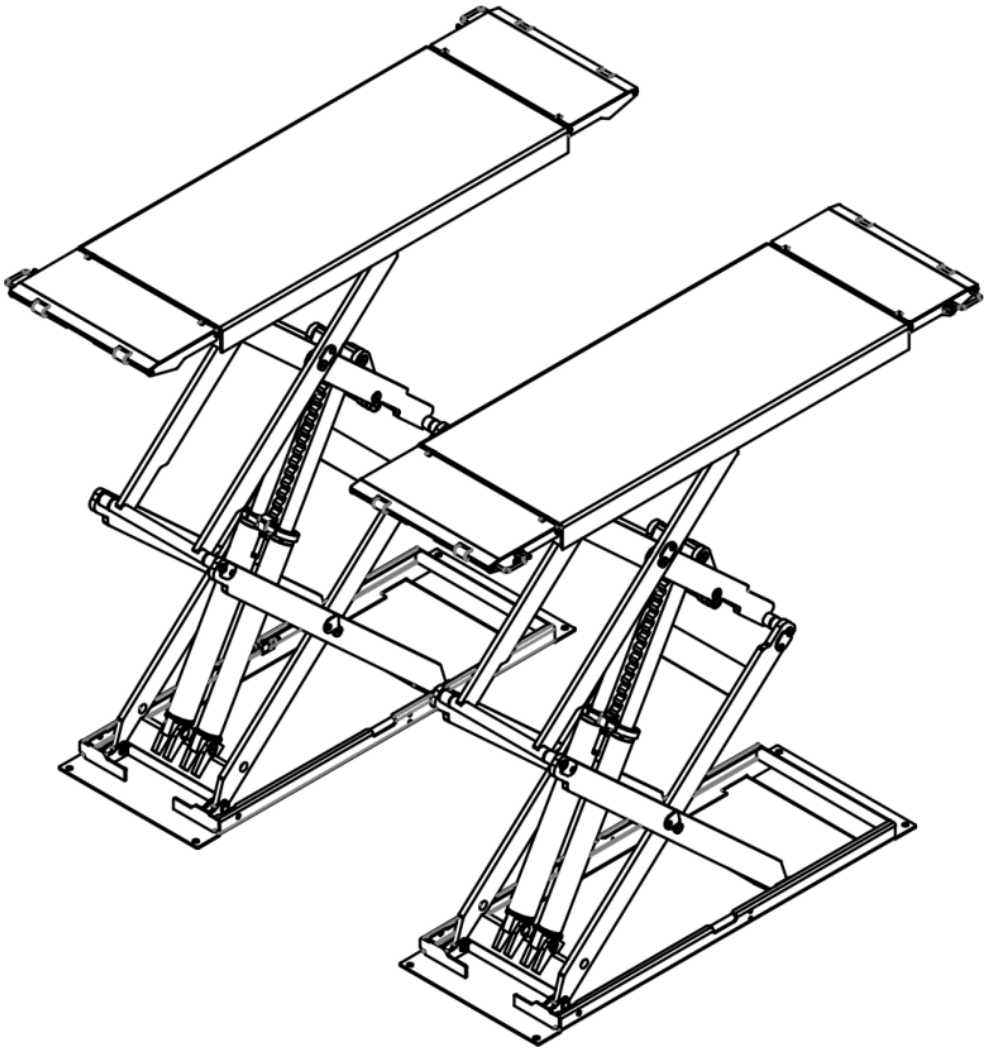

Section from source page 3

NOTE TO THE USER

Thank you for purchasing this product. Read these instructions carefully for safe and correct use of the lift, and keep them available for future reference.

• This manual applies to CSL 3500 XXU.

• Read this manual first to understand the safety measures provided in the design and construction.

• Ensure that the manual is delivered to the end user to implement the safety measures.

• Do not use the lift in a potentially explosive atmosphere.

No part of this publication may be reproduced in any form without permission. This publication is subject to change without notice.

Section from source page 5

CONTENTS

References correspond to printed source pages.

Preface - 1

Packing, transport and storage - 1

Chapter 1 Machine description - 3

1.1 Application; 1.2 Features; 1.3 Construction - 3

Chapter 2 Specifications - 4

2.1 Technical data; 2.2 Dimensions - 4

2.3 Installation scheme; 2.4 Suitable vehicles - 5

Chapter 3 Safety - 6

Chapter 4 Installation - 10

4.1 Requirements; 4.2 Installation - 10

Chapter 5 Adjustment - 13

5.1 Preparation; 5.2 Adjustment - 13

Chapter 6 Operation - 15

6.1 Notices; 6.2 Electrical controls - 15

6.3 Operation; 6.4 Oil make-up in normal service; 6.5 Emergency manual lowering during power failure - 16

Chapter 7 Maintenance and care - 17

Chapter 8 Troubleshooting - 18

Appendix A Special notes - 20

Section from source page 6

CONTENTS - CONTINUED

Appendix B Spare parts - 20

Appendix C Electrical schematic - 21

Section from source page 7

PREFACE

This manual is intended for workshop personnel experienced in lift use (operators) and technicians responsible for routine maintenance. Read it carefully before any work with the lift. It contains important information on the personal safety of operators and maintenance personnel, safe installation and safe lift operation.

KEEPING THE MANUAL

The manual is an integral part of the lift and must always accompany it. Keep it near the lift in an accessible location so that operators and maintenance personnel can find and consult it quickly at any time. Pay particular attention to the safety information and warnings in Chapter 3.

The source states that the lift is designed and manufactured according to a European standard.

Lifting, transport, unpacking, assembly, installation, commissioning, initial adjustment, testing, extraordinary maintenance, repair, overhaul, subsequent transport and dismantling must be performed by specialist personnel from the licensed dealer or a service centre authorised by the manufacturer.

The manufacturer accepts no responsibility for injury or damage to vehicles or property if these operations are carried out by unauthorised personnel or the lift is used improperly.

This manual explains operational and safety matters for operators and maintenance personnel. Read it before working to understand the structure, operation and correct use.

Personnel must understand the terminology and the maintenance and repair tasks and be able to interpret the drawings and descriptions correctly. Requirements in the installation country apply. Maintenance personnel also require the specific mechanical and technical knowledge needed to perform the described work safely.

OPERATOR: person authorised to use the lift.

MAINTENANCE TECHNICIAN: person authorised to perform routine maintenance.

The manufacturer reserves the right to make minor manual changes following technical improvements.

PACKING, TRANSPORT AND STORAGE

ALL PACKING, LIFTING, HANDLING, TRANSPORT AND UNPACKING OPERATIONS ARE RESERVED FOR EXPERT PERSONNEL.

PACKING: see the following illustrations.

Section from source page 8

Figs. 1 and 2: packed assemblies.

STANDARD EQUIPMENT

Oil lines and accessories, front panel and cover panel (carton 1); main and secondary platforms (carton 2); control box (carton 3). Three packages in total.

TRANSPORT

Packages can be lifted or moved by forklift, crane or overhead crane. During slinging, a second person must monitor the load to prevent dangerous swinging.

Use suitable transport vehicles or vessels for loading and unloading. On arrival, check that all delivery-note items are present. Missing parts, defects or damage may result from transport.

If anything is missing or damaged, examine the affected cartons against the packing list, establish the damage and missing items, and notify the responsible person or carrier immediately.

The machine is heavy. Manual loading, unloading and carrying are not intended; working safety is essential. Follow the handling arrangement in Fig. 3.

STORAGE

• Store in a warehouse; protect against water if stored outside.

• Use a closed truck for road transport and a container for shipping.

• Keep the control box upright during transport and protect it against crushing by other goods.

• Storage temperature: -25 to +55 °C.

Illustrations and controls - 8

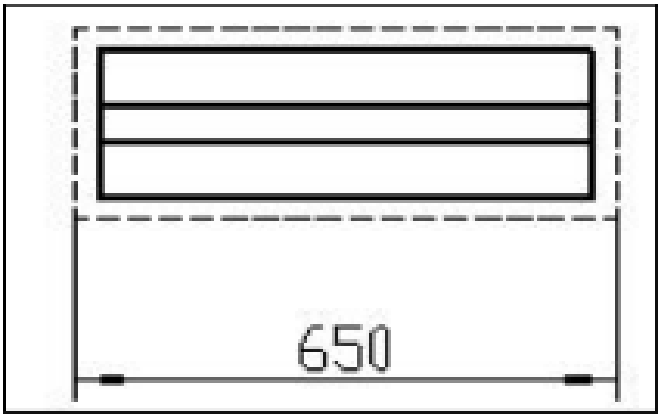

8.1

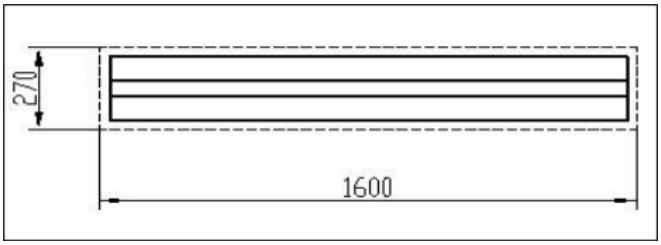

8.2

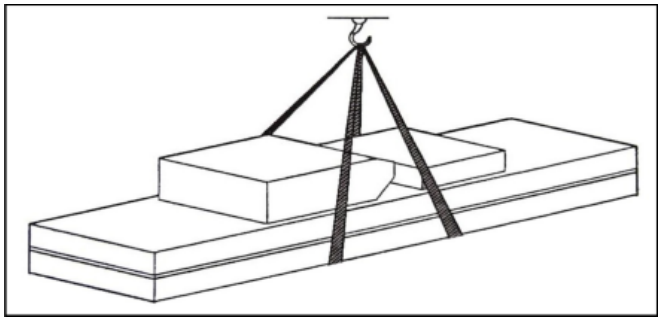

8.3

Section from source page 9

CHAPTER 1 - MACHINE DESCRIPTION

1.1 Application

The low-profile scissor lift is intended for vehicles up to 3500 kg for testing, maintenance and vehicle care. It is particularly suitable for basement use or floor installation without a pit or recessed construction.

1.2 Features

• Concealed, slim scissor structure with a small footprint; no pit required.

• Independent control box with low-voltage control.

• Hydraulic volume compensation and synchronised cylinders maintain platform synchronisation.

• Double protection by hydraulic locking and mechanical safety pawls.

• Safety valve and hose-rupture protection for hydraulic failure and overload; a burst line does not cause rapid descent.

• High-quality hydraulic and electrical components, including components from Italy, Germany and Japan as described in the source.

• Manual lowering during power failure.

1.3 Construction

Assemblies: foundation/installation area; machine frame with load-bearing structure and safety mechanisms; control box.

Basic structure: cement/concrete foundation.

Frame: steel links, main lifting platform, sliding plate, pneumatic double safety teeth and hydraulic tank.

Control box: oil tank, hydraulic pump, valves and other controls below; electrical system above.

The scissor lift is designed exclusively for lifting vehicles. All other uses are unauthorised. In particular, it is not suitable for washing or spraying. Never lift a vehicle exceeding the maximum capacity.

Section from source page 10

CHAPTER 2 - SPECIFICATIONS

2.1 Main technical data

Model: CSL 3500 XXU.

Drive: electrohydraulic.

Capacity: 3500 kg.

Maximum lifting height: 1920 mm.

Minimum height: 110 mm.

Platform length: 1550-2170 mm.

Platform width: 650 mm.

Lifting time: no more than 55 s.

Lowering time: no more than 55 s.

Overall length in the original drawing: 2100 mm.

Overall width in the original drawing: 2055 mm.

Machine weight: 930 kg.

Supply: AC 400 V or 230 V ±5 %, 50 Hz.

Power: 2.2 kW.

Hydraulic oil: 15 litres of anti-wear hydraulic oil, provided by the user.

Air pressure: 6-8 kg/cm².

Working temperature: 5-40 °C.

Working humidity: 30-95 %.

Noise: <76 dB.

Installation altitude: no more than 1000 m.

Storage temperature: -25 to +55 °C.

2.2 Dimensions

Fig. 4 shows the construction and arrangement. The confirmed platform and lift dimensions above apply to the offered version. Other overall/connection dimensions in the older drawing must be checked against the delivered version before installation planning.

Motor: Y90L; rated power 2.2 kW; voltage AC 400 or 230 V ±5 %; current at 400 V: 5 A, at 230 V: 10 A; frequency 50 Hz; four poles.

Illustrations and controls - 10

Reference drawing of the original construction. Confirmed version: lift height 1920 mm; platforms 1550-2170 × 650 mm. Other overall and connection dimensions are from the older drawing and must be verified before installation planning.

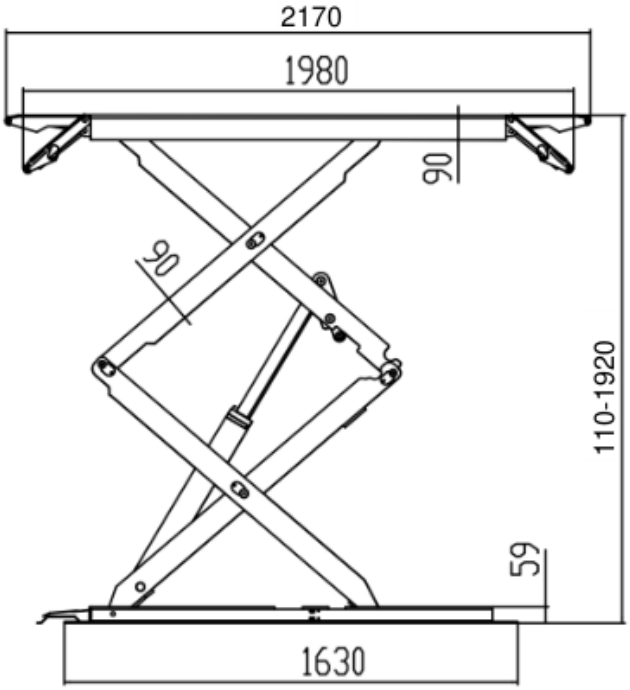

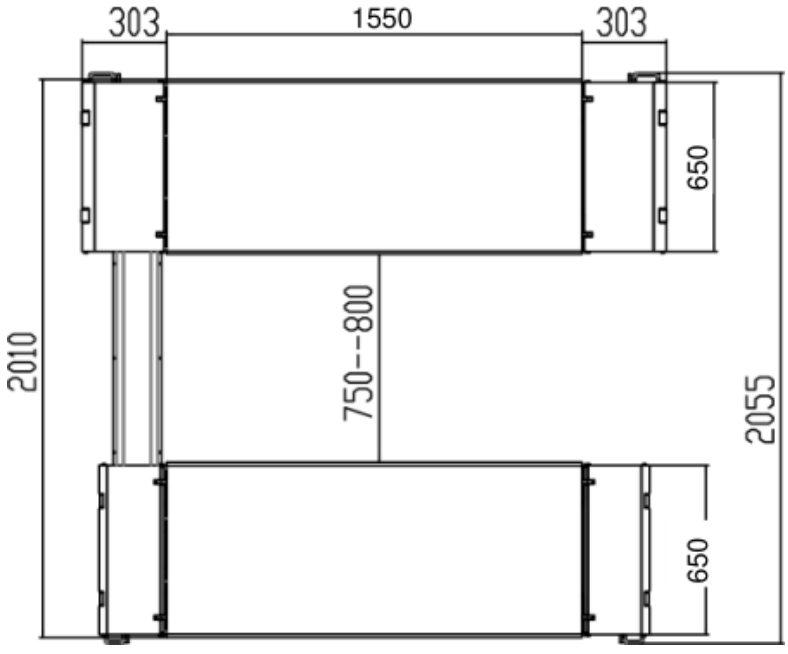

Section from source page 11

Motor - continued

Speed: 2800 rpm. Mounting form: B14. Insulation class: F.

Connect the motor according to the enclosed diagrams. Rotation is clockwise.

Pump

Type: P4.3. Gear pump. Displacement: 4.3 cm³/revolution. Connection with relief valve. Continuous working pressure: 210 bar. Intermittent working pressure: 150-300 bar.

Fill the tank with 15 litres of anti-wear hydraulic oil.

2.3 Installation scheme

Required connections: control-box power supply, 400 V or 230 V, 15 A; control-box compressed-air inlet, Ø8 × 6 mm.

Requirements: concrete type 425#, source curing period 15 days. Clean the base layer. Concrete thickness at least 150 mm. Maximum level variation over the full length: 10 mm.

Fig. 5: foundation and installation plan.

Note: concrete foundation is required at the ends of platforms P1 and P2. If the existing indoor floor is thinner than 150 mm, provide a 2500 × 2500 mm area of concrete at least 150 mm thick at the P1/P2 ends.

Concrete thickness and levelness are essential. The machine's adjustment cannot compensate for major foundation defects.

2.4 Suitable vehicles

Suitable vehicles must remain within the following weight and dimensional limits.

Maximum total weight: 3500 kg.

The following diagrams define the dimensional operating limits.

Illustrations and controls - 11

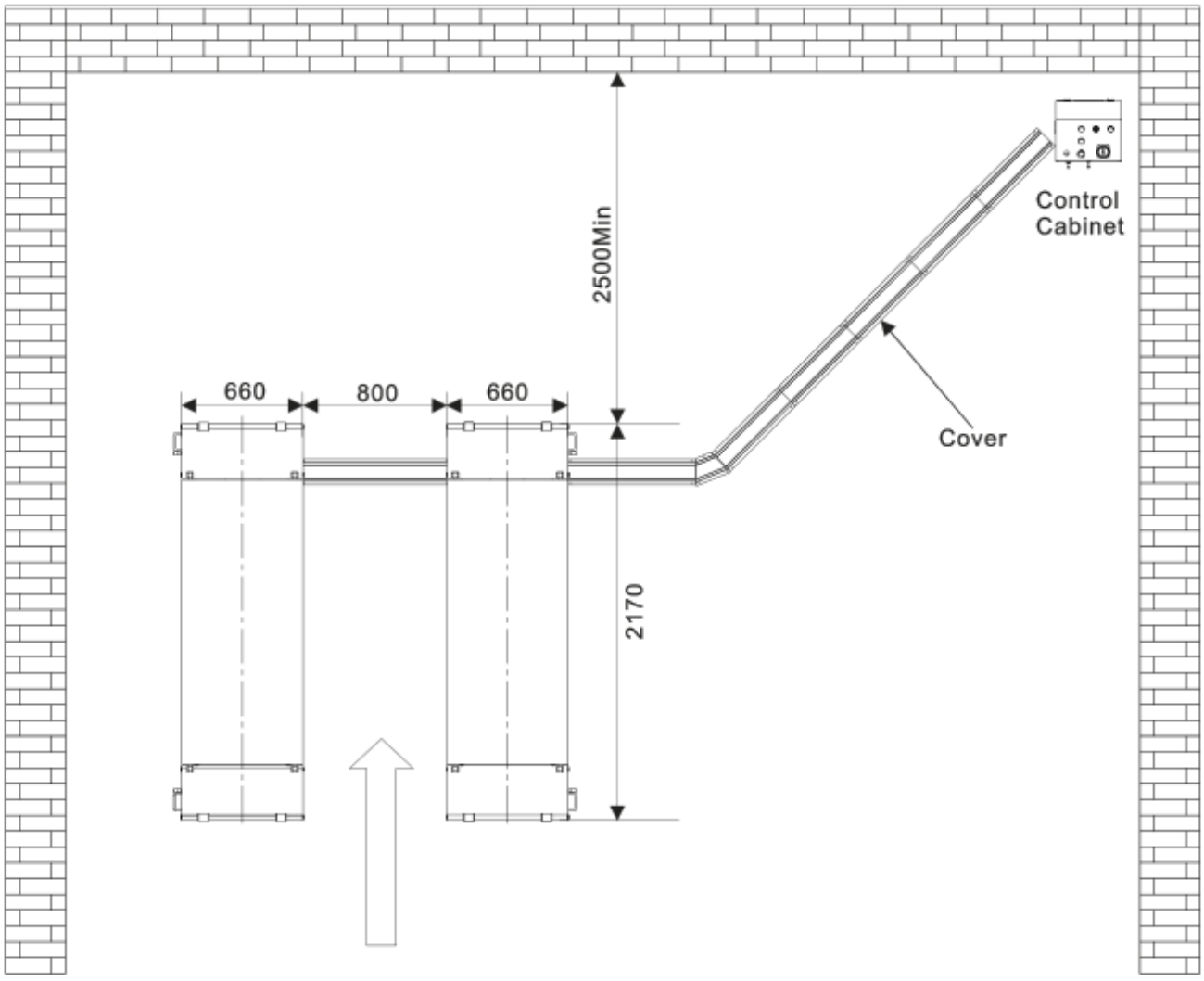

Fig. 5: Control Cabinet; Cover = pipe/cable cover. Installation sketch dimensions are from the original drawing.

Section from source page 12

Fig. 6 - Vehicle limits at 3500 kg

Dimension | Minimum (mm) | Maximum (mm)

A | 1900 | 4000

B | 100 | -

C | - | 1900

D | 900 | -

Low underbody parts may interfere with lift components. Take particular care with sports cars.

Customised or non-standard vehicles must remain within the stated capacity. Adjust the personnel safety zone for vehicles of unusual dimensions.

CHAPTER 3 - SAFETY

Read this chapter carefully and completely. It contains important information protecting operators and others from improper lift use.

It explains hazardous situations during operation and maintenance, the installed safety devices and their correct use, residual risks and general and specific precautions.

The lift is designed to raise and hold vehicles inside an enclosed workshop. All other uses are unauthorised, particularly:

• washing or spraying;

• work platforms for people or lifting people;

• crushing as a press;

• use as an elevator;

• use as a lifting jack for vehicle bodies or wheel changing, as restricted in the source.

The manufacturer is not liable for injuries or damage caused by incorrect or unauthorised use.

During lifting and lowering, remain at the illustrated control station. No one may enter the indicated danger zone. Persons may go beneath the vehicle only when it is raised, the platforms are stationary and the mechanical safety devices are fully engaged.

Illustrations and controls - 12

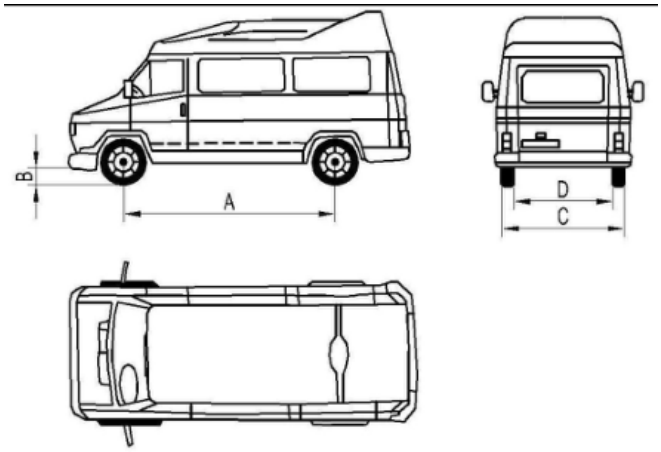

12.1

Section from source page 13

The safety gear must be fully locked.

DO NOT OPERATE WITHOUT PROTECTIVE DEVICES OR WITH SAFETY DEVICES DISABLED. FAILURE TO COMPLY CAN CAUSE SERIOUS INJURY AND IRREPARABLE DAMAGE TO THE LIFT AND VEHICLE.

Fig. 7: operating and danger zones.

GENERAL PRECAUTIONS

Operators and maintenance personnel must observe the safety rules in the installation country.

• Work only at the positions specified in this manual.

• Never remove or disable mechanical, electrical or other safety devices.

• Read the machine labels and the safety information in this manual.

Meaning of the source safety notices:

WARNING: unsafe operations that can cause minor injury and damage to the lift, vehicle or other property.

CAUTION: possible danger of serious injury and property damage.

RISK OF ELECTRIC SHOCK: specific notice at locations with a high electrical-shock risk.

RISKS AND PROTECTION

The following sections describe risks to operators and maintenance personnel with a raised vehicle and the protective measures provided.

For personal and vehicle safety:

• Do not enter the safety zone during lifting.

• Check that the vehicle is correctly positioned (Fig. 8).

• Lift only suitable vehicles. Do not exceed the capacity, maximum height or permitted length/width overhang.

Illustrations and controls - 13

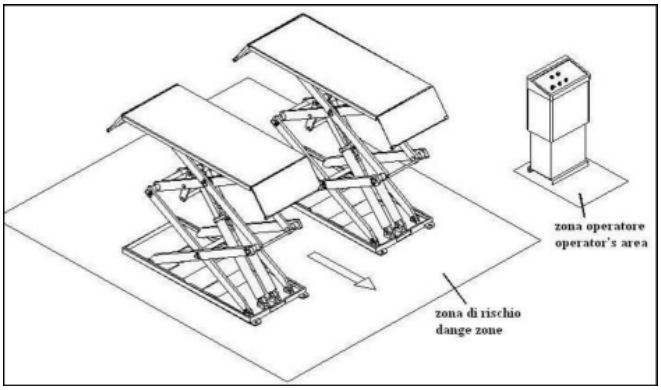

13.1

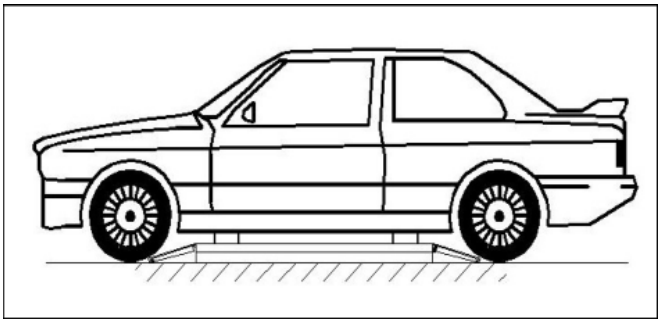

13.2

Section from source page 14

• No persons may remain on the platforms during movement or while stationary.

GENERAL LIFTING AND LOWERING RISKS

Protection against overload or drive failure includes:

• Under overload, the relief valve opens and returns oil directly to the tank (Fig. 9).

• A hose-rupture/locking valve at the bottom of each cylinder limits the relevant platform's descent speed if a hydraulic line bursts (Fig. 10).

• Safety teeth and pawls protect people under the lift if other safeguards fail. Check their integrity and complete engagement (Fig. 11).

No foreign object may prevent the safety gear from engaging normally.

RISKS TO PERSONNEL

The following risks to operators, maintenance personnel and others arise from incorrect use.

CRUSHING

Leave the specified area during lifting and lowering. Nobody may work beneath moving parts. Remain in the safe zone.

IMPACT

Check that nobody is in the danger zone before moving the lift. If work requires stopping at low height, especially below 1.75 m, take care not to strike components that are not specially colour-marked.

Illustrations and controls - 14

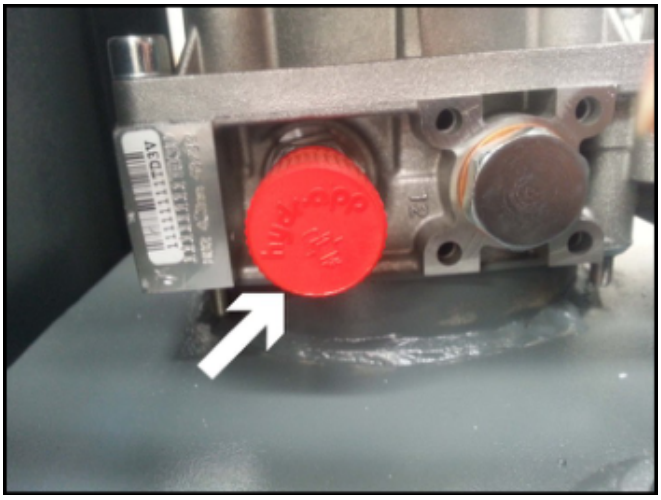

14.1

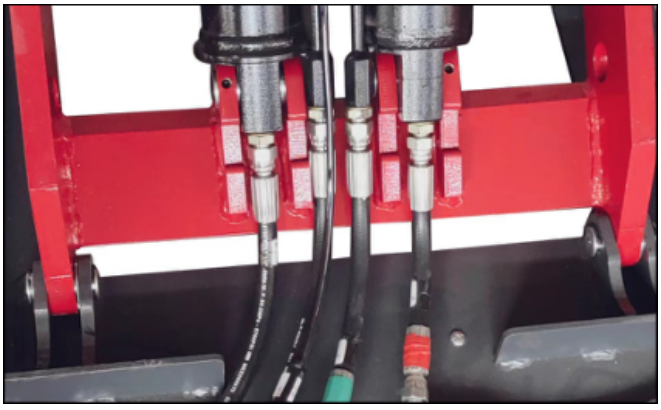

14.2

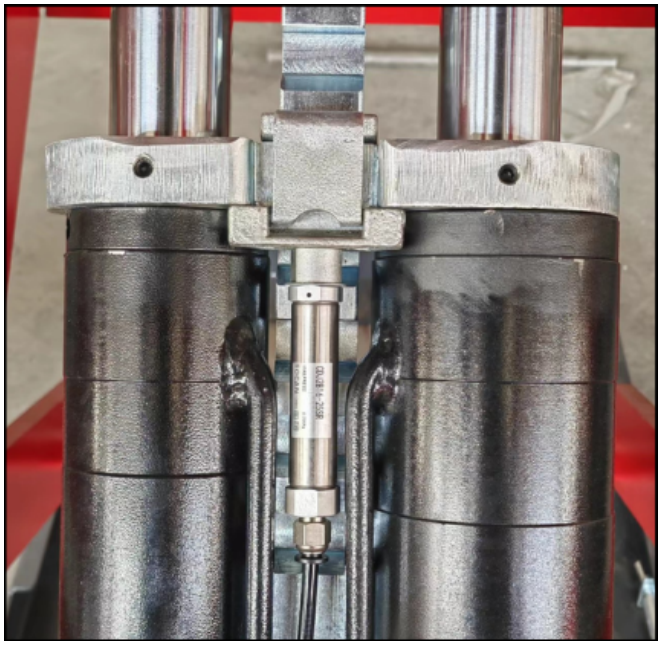

14.3

Section from source page 15

Fig. 12: impact hazard.

PERSONNEL FALLS

Nobody may enter the platforms or vehicle during lifting or lowering.

VEHICLE FALLS

This may result from incorrect positioning, excessive weight or unsuitable vehicle dimensions. The vehicle engine must not run during lift testing. Keep objects out of the lowering area and off moving parts.

SLIPPING (Fig. 13)

Lubricants on the floor cause slipping. Keep platforms and the area beneath and immediately around the lift clean. Remove oil spills immediately.

ELECTRIC SHOCK

Damaged insulation creates electrical hazards. Do not use water jets, steam, solvents or paint near the lift, particularly near the electrical control panel.

INADEQUATE LIGHTING

Operators and maintenance personnel must ensure sufficient, uniform lighting in all areas according to local rules.

Continuously observe the lift during movement and operate only from the control station. Place rubber pads under the specified chassis lifting points.

Tampering with safety devices is strictly forbidden. Never exceed maximum capacity. Lift vehicles without additional load.

Follow all operating, maintenance and safety requirements carefully.

Illustrations and controls - 15

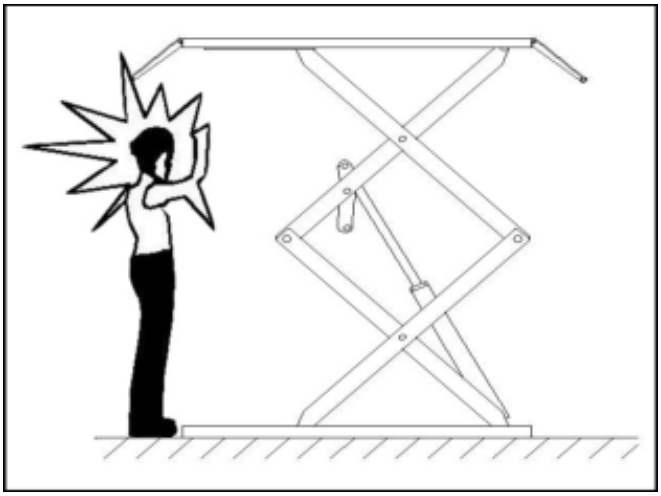

15.1

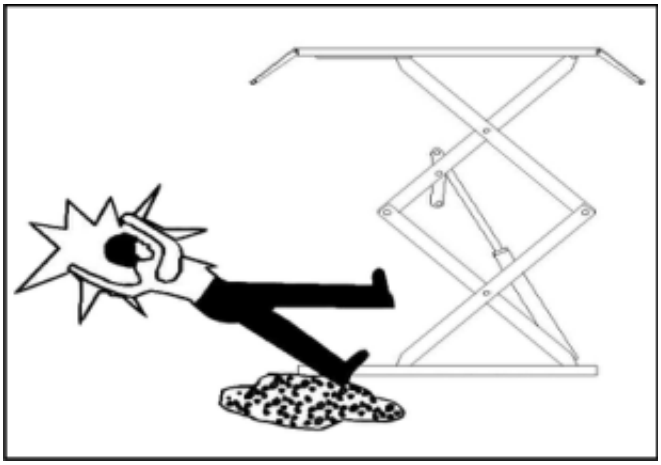

15.2

Section from source page 16

CHAPTER 4 - INSTALLATION

ONLY SKILLED, AUTHORISED PERSONNEL MAY PERFORM THESE OPERATIONS. FOLLOW ALL INSTRUCTIONS TO PREVENT DAMAGE AND INJURY.

4.1 Requirements

• Install according to the specified distances from walls, columns and other equipment (Fig. 14).

• Keep at least 1000 mm from walls and allow space for convenient working, the control station and emergency escape routes.

• Prepare electrical and compressed-air supplies.

• Minimum room height: 4000 mm.

• The floor must be perfectly level and sufficiently strong: at least 250 kg/cm²; concrete at least 150 mm thick.

• Provide sufficient, uniform lighting for safe adjustment and maintenance, avoiding reflections and glare.

• Check delivery completeness before installation.

• Follow the illustrated moving and installation procedures.

See the transport/storage section at the start of the manual.

4.2 Installation

4.2.1 Platforms

• Place both platforms at their intended positions.

• Cylinder bottoms face the front, in the vehicle entry direction.

• Raise with a forklift or other lifting equipment (Fig. 15). Ensure both safety devices are active and locked.

A wooden support may be inserted in the middle of the articulated linkage as additional protection against safety-device failure.

Do not work underneath or operate the lift up/down until the hydraulic system is completely filled with oil.

Illustrations and controls - 16

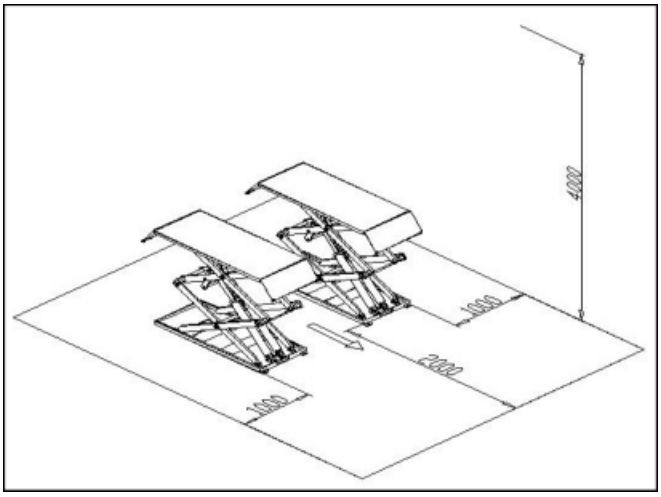

16.1

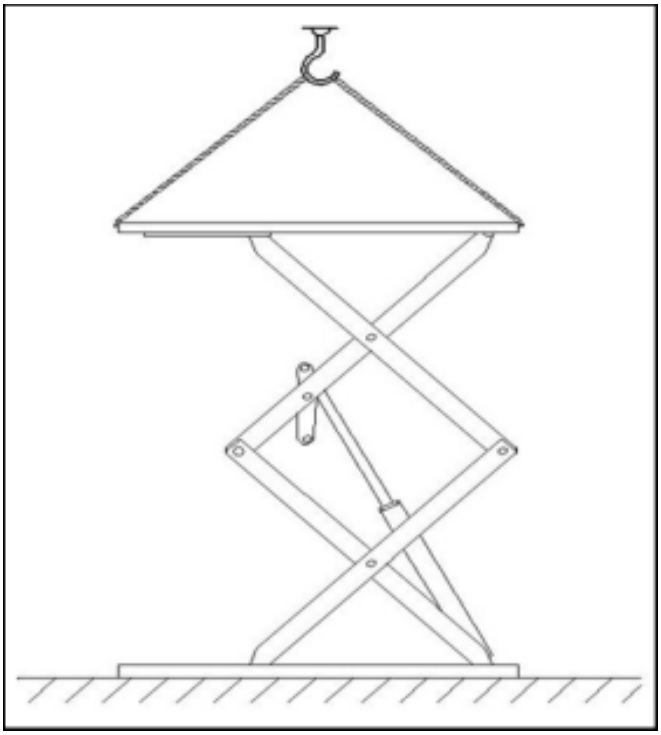

16.2

Section from source page 17

• Adjust the distance between platforms and ensure that they are parallel.

4.2.2 Line connections

Connect wiring and hydraulic lines according to the diagrams. Connect air only after completing the hydraulics. Do not damage oil lines, wiring or air hoses.

Protect connections against contamination so that foreign matter cannot enter and damage the hydraulic or pneumatic circuits.

4.2.2.1 Electrical connection

Follow the wiring routes and numbers in the diagram. Only qualified electricians may perform this work.

• Open the front control-box cover.

• Supply: 400 V, three-phase, five conductors, cable 3 × 2.5 mm² + 2 × 1.5 mm², connected to L1, L2, L3, N and the designated incoming terminal. Connect PE first to the marked earth screw (Fig. 16), then to the earth screws on both platforms.

• For 230 V three-phase operation, change the transformer and motor connections as in Fig. 17.

• Photocell: connect 0V, INPUT and DC+ to the identically marked control-box terminals.

• Limit switch: connect wires 109, 125 and 127 to the same-numbered terminals.

4.2.2.2 Hydraulic connection

Connect lines according to the hydraulic diagram (Fig. 18). Only skilled, authorised personnel. Protect hose ends and fittings carefully from damage and contamination.

Illustrations and controls - 17

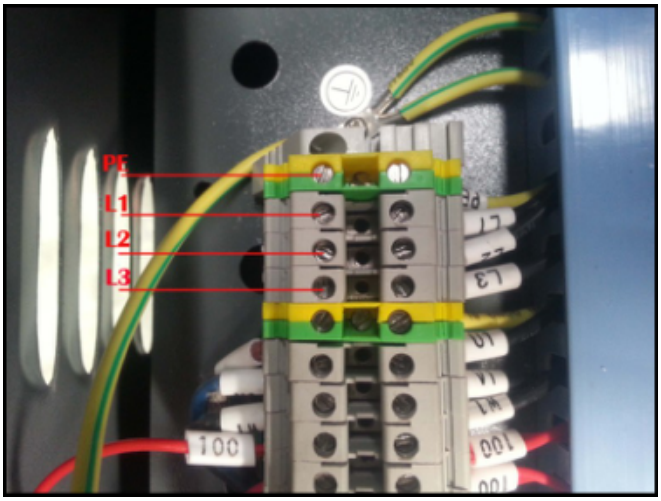

17.1

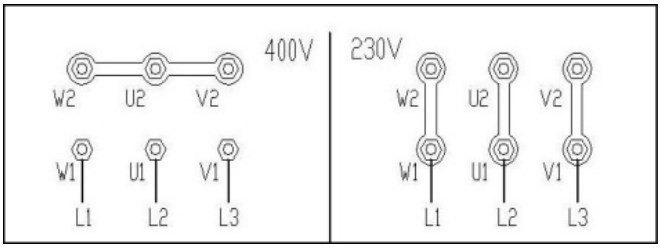

17.2

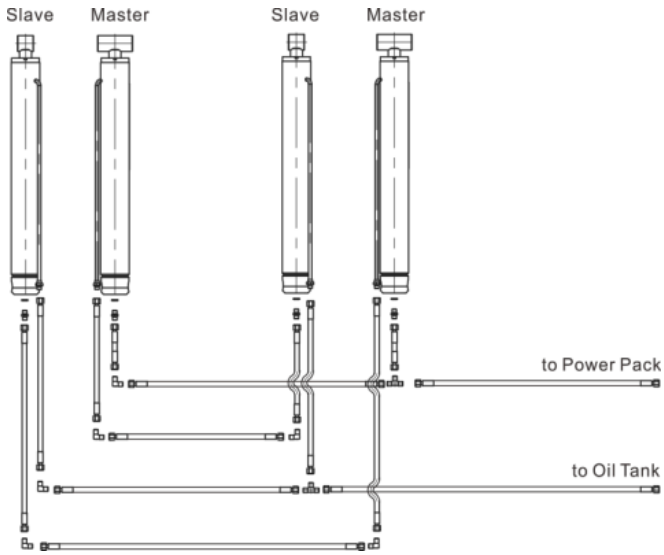

17.3

Fig. 17: motor connections 400 V / 230 V. Fig. 18: hydraulic cylinders and hydraulic lines. Retain all line identifiers.

Section from source page 18

• Protect hydraulic connections against impurities. Do not mix up hose numbers.

In the standard installation, the control box is on the left in the vehicle entry direction. Adjust the corresponding hoses if it is placed on the right.

4.2.2.3 Compressed-air connection

Connect the pneumatic circuit according to its diagram. Skilled, authorised personnel only.

• Connect the Ø8 × 5 supply hose to the pneumatic solenoid valve in the control box (Fig. 19).

• Route the hose from the solenoid valve to the safety-pawl pneumatic actuators according to the diagram (Fig. 20).

• Protect connections against impurities.

• Connect through the additional oil/water separator ahead of the control box to improve pneumatic life and reliability.

Do not kink or tie hoses so as to obstruct airflow.

Fit the separator before connecting the air supply to the solenoid valve to condition the air and prevent pneumatic component failure.

Illustrations and controls - 18



18.1

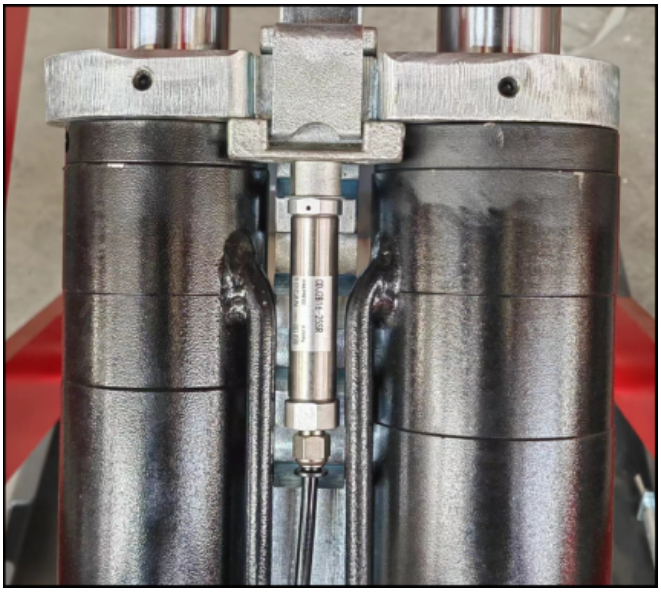

18.2

Section from source page 19

CHAPTER 5 - ADJUSTMENT

5.1 Preparation

Add oil and check phase sequence. After installation according to Fig. 4 and connection of hydraulics, electrics and air:

• Open the tank and add 15 litres of hydraulic oil supplied by the user.

Oil must be clean. Contamination can obstruct lines and prevent solenoid-valve operation.

• Switch on. Briefly press UP and check clockwise motor rotation viewed from above. If incorrect, switch off and change the phase sequence.

• Turn on compressed air.

Dangerous voltage exists inside the powered control box. Authorised specialists only.

5.2 Adjustment

5.2.1 Oil make-up/synchronisation

If the platforms are not level, set PHOTO to OFF to disable the photocell, if fitted, and set SYNCHRONIZATION inside the control box to ON.

• Lower to minimum height.

• Keep UP pressed to raise to maximum height.

• Continue holding UP until hydraulic oil returns to the tank through the return hose.

Figs. 21 and 22: adjustment components and indication.

NEVER SYNCHRONISE UNDER LOAD. THIS DAMAGES THE CYLINDER SEALS.

Check free, reliable operation of both safety pawls and hydraulic and pneumatic tightness.

After adjustment, return PHOTO to ON and SYNCHRONIZATION to OFF for normal lifting.

Illustrations and controls - 19

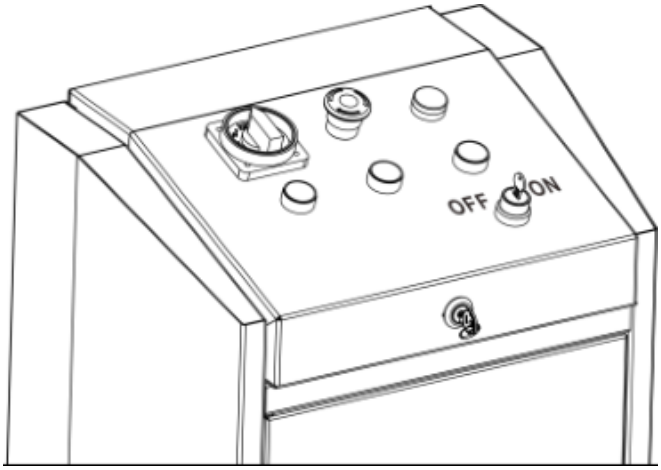

19.1

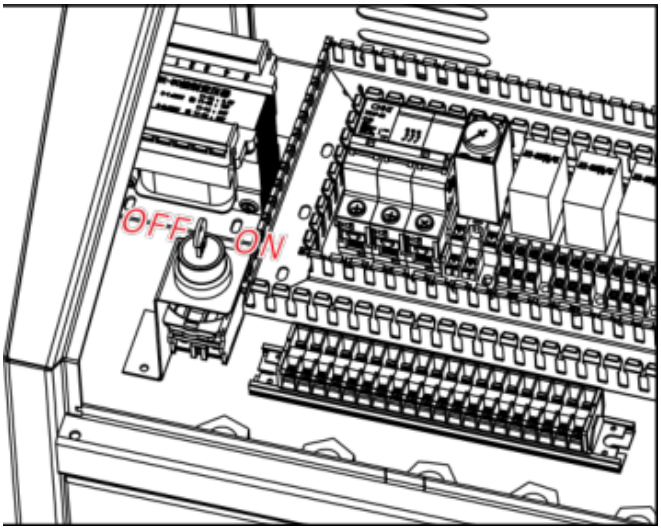

19.2

PHOTO = photocell; SYNCHRONIZATION = synchronization adjustment; ON/OFF; UP = raise.

Section from source page 20

5.2.2 Floor anchors

Install anchors only after the required concrete curing period, otherwise fixing strength is impaired.

• Set platform parallelism and spacing according to Fig. 4.

• Use a percussion drill with an 18 mm bit, drill 120 mm deep and clean the holes (Fig. 23).

• Tap the anchors in with a light hammer. Do not insert the centre expansion pin until after levelling.

5.2.3 Levelling

• Use a spirit level, water level and adjustment screws on both sides of the base plates.

• Correct low foundation areas with steel shims.

• After levelling, insert the centre expansion pins and drive them with a heavy hammer.

• Tighten anchor nuts (Fig. 24).

Do not insert centre pins before concrete has fully cured. Fill gaps under the base plates with steel plates or concrete.

5.2.4 No-load test

• Switch on QS.

• Press UP SB1; observe synchronisation and smooth movement.

• Check safety-pawl position.

• Check hydraulic and air lines for leakage.

No people or objects may be beside or below the lift during testing. Press SB0 immediately if anything is abnormal. Remove the cause before retesting.

5.2.5 Loaded test

• Drive a vehicle within the rated capacity onto the platforms. The driver must leave.

• Place rubber pads under the designated vehicle lifting points.

Illustrations and controls - 20

Associated keys and menu symbols



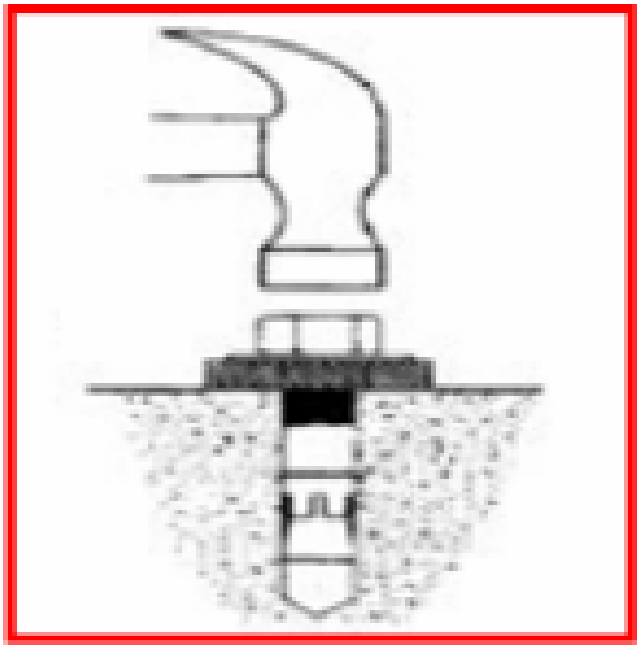

20.1

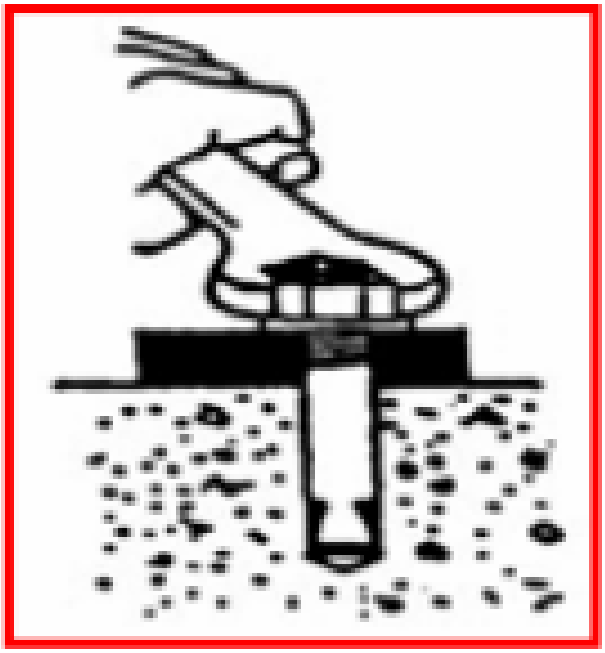

20.2

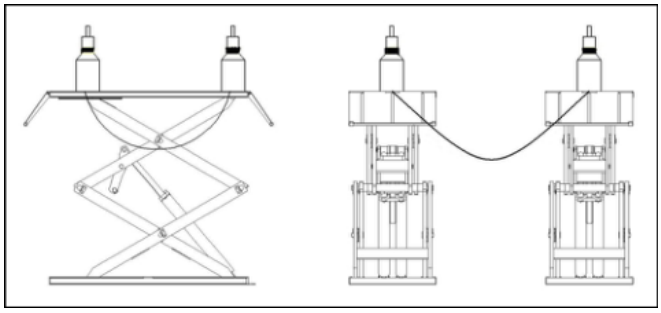

20.3

Section from source page 21

• Press UP SB1 and observe synchronisation and smooth lifting.

• Check the safety pawls.

• Check hydraulic and pneumatic lines for leakage.

No persons or objects may remain beside or under the lift during the loaded test. Vehicle weight must not exceed capacity. Check for leaks. If abnormal, press SB0, rectify the cause and repeat the test.

CHAPTER 6 - OPERATION

Only skilled, trained personnel may operate the lift. Check the following.

6.1 Operating notices

• Clear obstacles around the lift before use.

• During movement, nobody may be beside, underneath or on the platforms.

• Do not lift overweight vehicles or other loads.

• Use rubber pads at the chassis lifting points.

• Observe synchronisation while raising/lowering. Stop immediately, inspect and rectify any abnormality.

• Raise slightly before lowering. Check that both safety pawls have fully disengaged; otherwise stop lowering.

• For long periods or overnight, lower fully, remove the vehicle and isolate power.

6.2 Electrical controls

Fig. 25 shows the switches and buttons described in the following section.

Illustrations and controls - 21

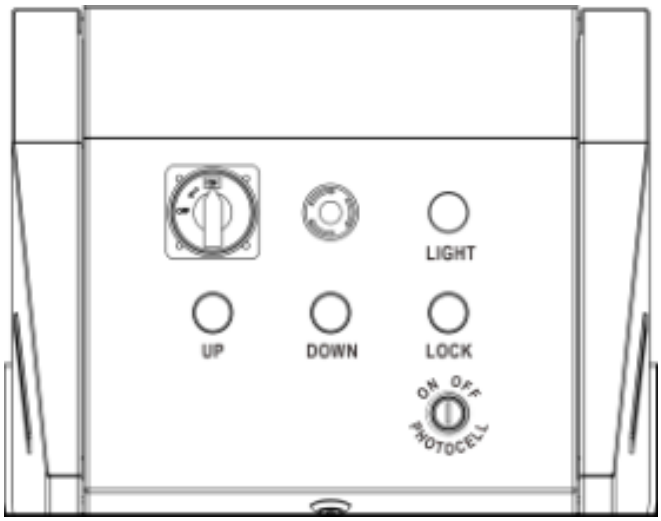

21.1

Controls: POWER/QS = main switch; UP/SB1 = raise; DOWN/SB2 = lower; EMERGENCY/SB0 = emergency stop; PHOTO = photocell. Other identifiers follow the wiring diagram.

Section from source page 22

6.3 Operation

6.3.1 Raising

• Press UP SB1: the pump supplies cylinders through the service shut-off valve, platforms rise and air pressure raises the safety pawls.

• Release UP: pump and lifting stop immediately. The air solenoid de-energises, closes the pneumatic circuit and the pawls fall into the safety teeth.

6.3.2 Lowering

• Press DOWN SB2: the pneumatic circuit lifts the pawls and the energised lowering solenoid opens. The platforms descend. Release DOWN: descent stops and pawls fall into the teeth.

6.3.3 Emergency stop

For abnormal conditions or maintenance, press and latch EMERGENCY STOP SB0. All operating circuits are interrupted and other functions are disabled.

6.3.4 Out-of-synchronisation stop, if equipped

If platform heights differ during movement, photoelectric monitoring stops operation. Adjust level as follows; use again only when heights are equal.

6.4 Oil make-up during normal service

After installation/adjustment, the right platform may settle lower than the left due to incomplete air removal, normal oil loss or leakage.

Perform adjustment WITHOUT LOAD, following 5.2.1.

6.5 Emergency manual lowering during power failure

Continuously observe the platforms and the vehicle. If anything is abnormal, close the hydraulic valve immediately.

Procedure (Fig. 26):

• Raise both safety pawls and support them with thin steel rods.

• Switch off the main switch to prevent unexpected operation when power returns. Open the rear control-box cover and locate lowering solenoid valve A.

• Loosen the manual hydraulic screw at the end of the valve core. The platforms begin to descend.

Illustrations and controls - 22

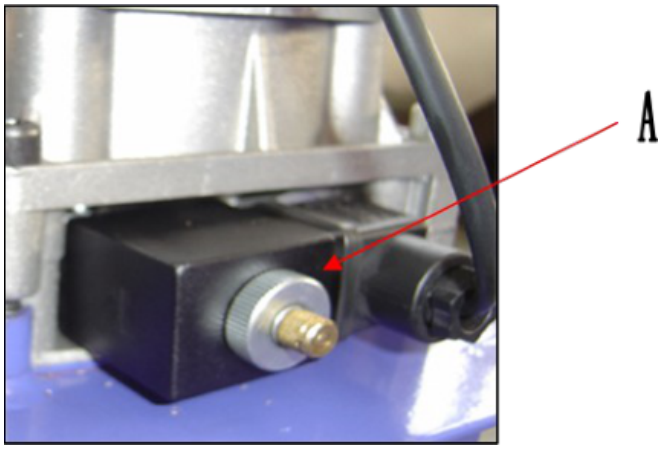

22.1

Section from source page 23

• After complete lowering, retighten the manual hydraulic screw immediately. Manual lowering is then complete.

CHAPTER 7 - MAINTENANCE AND CARE

Qualified personnel only.

• Lubricate all bearings and hinges weekly using an oil can.

• Lubricate safety teeth, upper/lower sliding blocks and other moving parts monthly.

• Replace hydraulic oil annually. Keep the level at the upper mark.

For oil changes, lower fully, drain the old oil and filter the hydraulic oil.

• Each team/shift must check free and reliable operation of the pneumatic safety devices.

Section from source page 24

CHAPTER 8 - TROUBLESHOOTING

Qualified personnel only. The complete troubleshooting table follows.

Section from source page 25

TROUBLESHOOTING TABLE

1. Motor does not run when raising.

Cause: incorrect power wiring. Remedy: inspect and correct wiring.

Cause: motor AC contactor does not engage. Manufacturer's procedure: if the motor runs when the contactor is actuated with an insulating rod, inspect the control circuit. If coil-terminal voltage is correct, replace the contactor. Qualified electricians only.

Cause: limit switch not closed. Check switch and wiring; adjust or replace the switch.

2. Motor runs but the lift does not rise.

Cause: reverse motor rotation. Swap supply phases.

Cause: light load rises but heavy load does not. Manufacturer's remedy: slightly increase the relief-valve safety-pressure setting by turning its adjustment clockwise. Clean the lowering-valve spool if dirt has jammed it.

Cause: insufficient oil. Refill.

Cause: service shut-off valve not closed. Close it.

3. No descent when DOWN is pressed.

Cause: pawls not released from teeth. Raise slightly, then lower.

Cause: pawl does not lift because of insufficient air, sticking or damaged air hose. Adjust pressure and inspect/replace the hose.

Cause: air solenoid does not operate. If energised but not opening, inspect or replace it.

Cause: lowering solenoid energised but inoperative. Inspect connector, coil and tightness of the copper-coloured end nut.

Cause: hose-rupture valve blocked. Remove it from the oil inlet at the cylinder bottom and clean.

4. Very slow descent at normal load.

Cause: oil too viscous, frozen or degraded, especially in winter. Replace according to the instructions.

Cause: hose-rupture valve blocked. Disconnect/shut off air so the pawls stay locked and do not lift. Remove the valve at the cylinder bottom and clean.

5. Platforms are not synchronised or level.

Cause: cylinder air not fully removed. Follow the oil make-up/adjustment procedure in 5.2.

Cause: leaks at lines or connections. Tighten fittings or replace seals, then refill and level.

Cause: oil make-up valve does not seal and adjustment is needed almost daily. Replace it, refill and adjust.

6. Noise during movement.

Cause: insufficient lubrication. Lubricate hinges and moving parts, including piston rods, with machine oil.

Cause: twisted base or machine. Relevel and fill/shim beneath the base.

Section from source page 26

APPENDIX A - SPECIAL NOTES

A.1 Used oil

Oil removed from the power unit and system during changes is a pollutant. Handle it according to the law of the installation country.

A.2 Dismantling and disposal

FOLLOW ALL CHAPTER 3 SAFETY PRECAUTIONS, WHICH ALSO APPLY TO ASSEMBLY.

Dismantling, like assembly, must be carried out by authorised technicians. Metal parts may be recycled as scrap. Dispose of all other materials according to the rules of the installation country. Where required for tax purposes, document dismantling using the declarations and records required at the time of disposal.

APPENDIX B - SPARE PARTS

B.1 Spare parts

For replacement and repair, follow ALL precautions in Chapter 7 Maintenance and Chapter 3 Safety.

Prevent accidental starting:

• Lock the control-box switch in position 0 with a padlock.

• The maintenance technician keeps the key throughout the work.

B.2 Ordering

Specify:

• lift serial number and year of manufacture;

• required part code, referring to the CODE column in parts tables;

• required quantity.

Send requests to the authorised reseller identified at the beginning of this manual.

Section from source page 27

APPENDIX C - ELECTRICAL SCHEMATIC

The complete schematic is reproduced below. Retain all component, terminal and wire identifiers.

Only qualified electricians may work on the electrical system. Use the connection appropriate to the voltage version supplied.

Illustrations and controls - 27

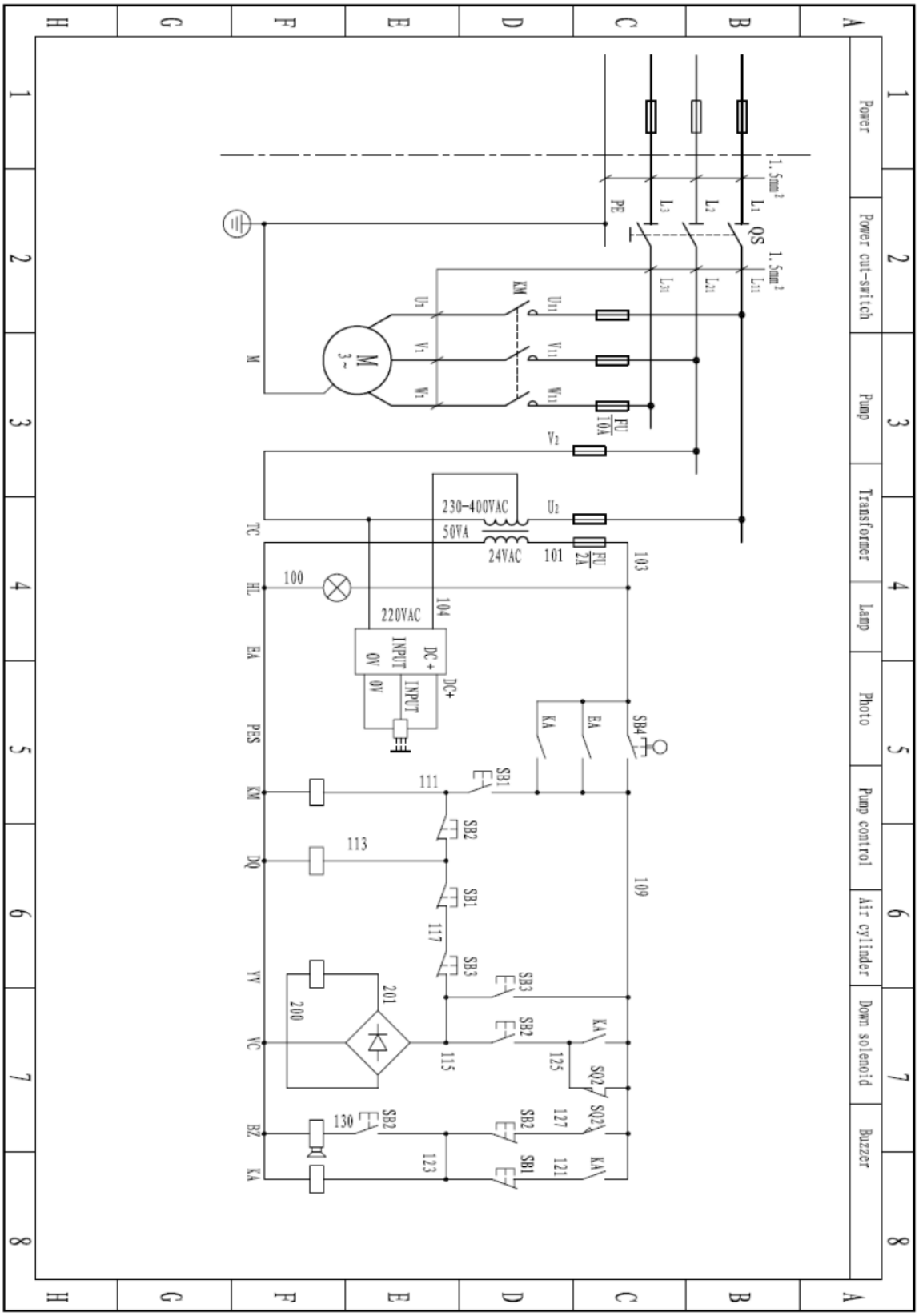

Legend: Power = supply; Power cut-switch = main isolator; Pump = pump motor; Transformer; Lamp = indicator lamp; Photo = photocell; Pump control; Air cylinder; Down solenoid = lowering solenoid valve; Buzzer; INPUT. Retain 0V, DC+, L1/L2/L3, PE and all component/terminal identifiers.