HAMMER TOOLS

CWB 575

Operating manual | English

Complete edition of the supplied manual. Sections identify their source pages; illustrations and controls follow the associated section. Technical identifiers are retained. Read all safety and operating instructions before use.

AUTOMATIC LCD WHEEL BALANCER

CWB 575

Installation, operation and maintenance manual

Source version: JH202506.1.0 ZHV

Read this manual before operation. Read and understand the safety precautions to protect yourself and prevent property damage.

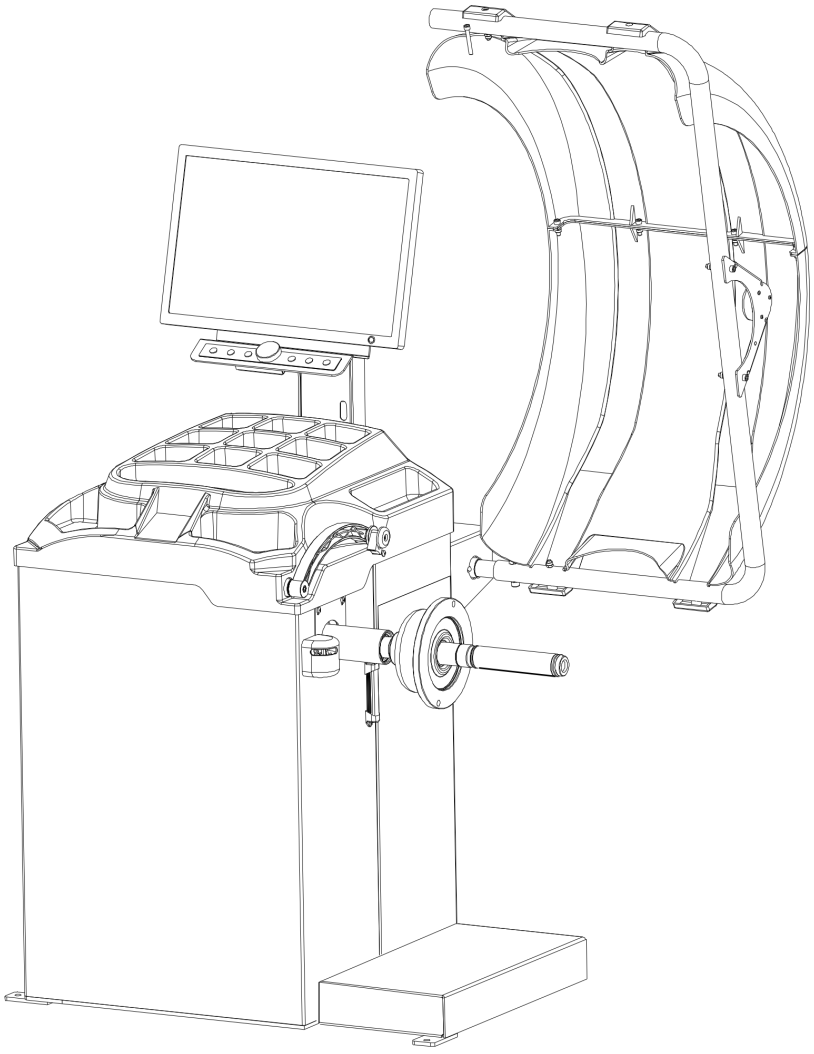

Section from source page 3

NOTE TO THE USER

Thank you for purchasing this product. Read these instructions carefully for safe and correct use of the wheel balancer. Keep them available for future reference.

• This manual applies to CWB 575.

• Read this manual first to understand the safety provisions incorporated in the design and construction.

• Ensure that the manual is delivered to the end user so that the safety measures can be implemented.

• Do not use the wheel balancer in a potentially explosive atmosphere.

No part of this publication may be reproduced in any form without permission. This publication is subject to change without notice.

Section from source page 4

WARNING

• This manual is a necessary part of the product. Read it carefully.

• Keep it for subsequent maintenance.

• Use this machine only for its intended purpose.

• The manufacturer is not responsible for damage caused by improper or unintended use.

PRECAUTIONS

• Only qualified, specially trained personnel may operate the equipment. Modifying components or using the machine for other purposes without the manufacturer's agreement, or contrary to the instructions, may cause direct or indirect damage.

• Install on stable ground, not a wooden pallet, otherwise measurement accuracy is affected.

• Keep the rear panel 0.6 m from the wall for ventilation. Leave sufficient operating space on both sides.

• Avoid hot or humid locations and proximity to heaters, taps, humidifiers or chimneys.

• Avoid excessive dust, ammonia, alcohol, thinner and sprayed binding agents.

• Keep non-operators away during use.

• Use suitable tools and equipment and personal protection, including safety glasses, hearing protection and work boots.

• Pay particular attention to machine markings.

• Do not touch moving parts or bring your hands close to them during operation.

• Do not remove or disable safety devices.

Section from source page 5

CONTENTS

Page references correspond to the printed source pages.

1. General - 1

2. Machine assembly - 1

3. Controls and components - 3

4. Balancing modes - 5

5. Indications and use - 6

6. Self-calibration - 14

7. Self-diagnosis - 20

8. Machine settings - 21

9. Motorcycle adapter - 22

10. OPT function - 22

11. Manual and video - 24

12. Errors - 24

13. Language selection - 26

Section from source page 7

1. GENERAL

1.1 Technical data

Maximum wheel weight: 65 kg. Power: 0.2 kW. Supply: 230 V, 50 Hz. Balancing accuracy: 1 g.

Nine modes: DYN, ALU1, ALU2, ALU3, ALU4, ALU5, ALUS1, ALUS2 and ST.

Balancing speed: 200 rpm. Cycle time: 7 s. Rim diameter: 10"-24" (256-610 mm). Sound pressure during the operating cycle: <70 dB.

1.2 Features

• Automatic distance and diameter entry.

• Laser-assisted 9 o'clock positioning in ALU-S.

• Static and dynamic balancing; ALU programs for alloy or specially shaped rims.

• Self-diagnosis for easier fault finding.

• Suitable for steel and aluminium-alloy rims.

1.3 Environment

Temperature: 5-50 °C. Altitude: no more than 4000 m.

2. MACHINE ASSEMBLY

2.1 Unpacking

Unpack the carton and check for missing accessories.

No. | Item | Quantity

1 | Width gauge | 1

2 | Cones No. 1, No. 2, No. 3 and No. 4 | 1 each

3 | Quick-release nut | 1

4 | Threaded hub | 1

5 | Cup for quick nut | 1

6 | Cup pad | 1

7 | Balancing hammer | 1

8 | 100 g weight | 1

9 | Hex key | 1

Illustrations and controls - 7

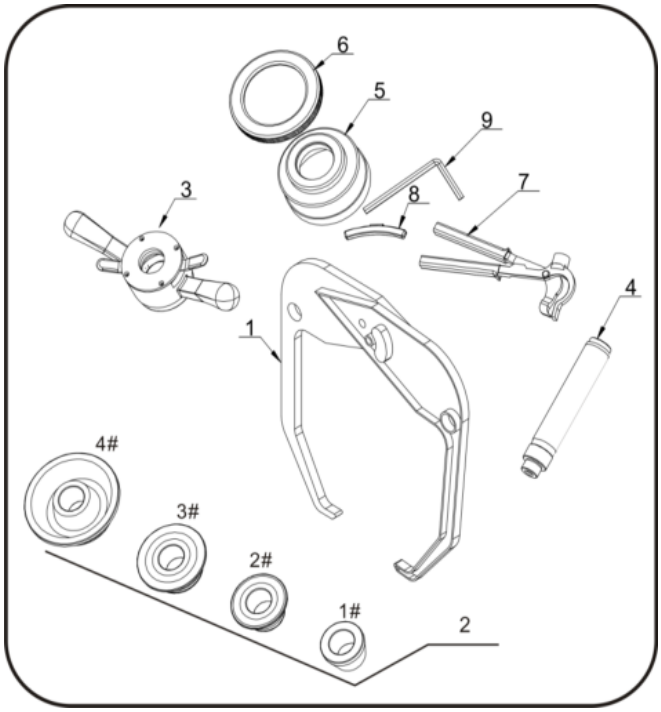

7.1

Section from source page 8

2.2 Installation

• Install on stable ground, not on a wooden pallet, otherwise measurement is inaccurate.

• Keep the rear panel 0.6 m from the wall for ventilation and allow sufficient space on both sides.

2.3 Secure the balancer to the floor with the screws in its base.

2.4 Adapter installation

The balancer is supplied with a cone adapter for securing wheels with a centre bore. See the illustration.

2.5 Wheel installation

Clean the wheel, remove existing balance weights and check tyre pressure. Choose the mounting method for the wheel type.

Illustrations and controls - 8

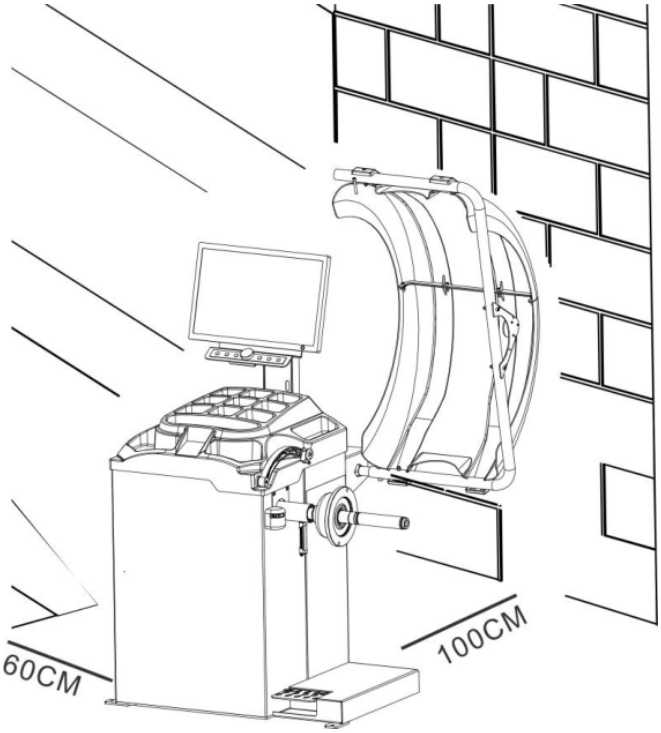

8.1

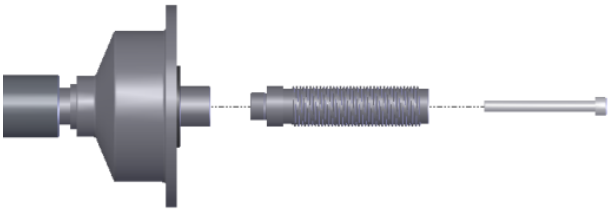

8.2

Section from source page 9

Mounting arrangements

Left: main shaft - wheel - suitable cone with small end inward - quick-release nut.

Right: main shaft - suitable cone with large end inward - wheel - quick-release nut.

Attention: a wheel may be fitted and held to help install the threaded hub. Do not let the wheel slide against the shaft when fitting or removing it, as this may scratch the shaft.

3. CONTROLS AND COMPONENTS

A: switch, standard.

B: cover with tool tray, standard.

C: gauge head, standard.

D: main shaft, standard.

E: pedal brake, optional.

F: protective hood, standard.

G: screen, standard.

H: keyboard, standard.

J: width gauge, standard.

K: laser, standard.

S = standard; O = optional.

Illustrations and controls - 9



9.1



9.2

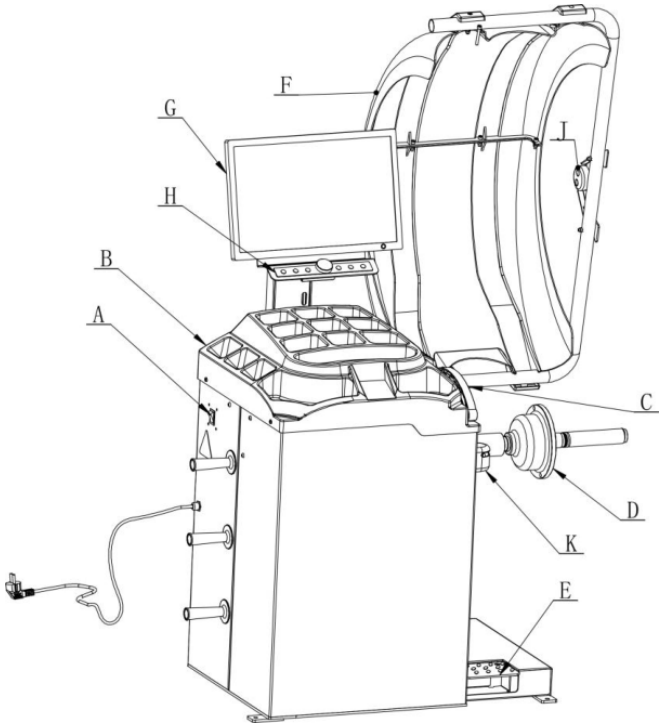

9.3

Section from source page 10

Screen (G)

1. Inner unbalance amount.
2. Outer unbalance amount.
3. Balancing mode.
4. Measurement unit.
5. Inner unbalance position indicator.
6. Outer unbalance position indicator.
7. Illustrated unbalance position.
8. Selectable function buttons.
9. Automatic locking.

Keyboard (H)

The illustrated symbols correspond to: rim-data entry; ALU mode selection; increase (+); stop/cancel/brake; decrease (-); start; unbalance display pitch and threshold; settings.

Key combinations

STOP + increase (+): inch/mm conversion.

STOP + settings: weight self-calibration.

The blue data-entry key also confirms the entries in the calibration menus.

Illustrations and controls - 10

Key symbols and combinations

	Rim data / confirm
	ALU mode
	Increase (+)
	STOP / cancel / brake
	Decrease (-)
	START
	Display pitch / threshold
	Settings
	STOP + orange Plus key: inch / millimetre selection
	STOP + Settings: weight calibration



10.1



10.2

Section from source page 11

Special functions, for example during mounting

Automatic brake switch: can also be used for wheel loading and unloading. Unbalance-position search: locates the correction position. The symbols are shown below.

4. BALANCING MODES

Clock positions refer to the inner / outer weight.

STANDARD: 12 / 12 o'clock. Switch on, enter a and d, close the hood and wait for the spin to stop. Fit clip-on weights to both rim edges.

ALU1: 9 / 9 o'clock. Switch on, enter a and d, press ALU until its indicator lights, close the hood and wait for the spin to stop. Fit adhesive weights to both rim shoulders.

ALU2: 12 / 9 o'clock. Switch on, enter a and d, select ALU, close the hood and wait for the spin to stop. Fit a clip-on weight at the inner edge and an adhesive weight at the outer shoulder.

ALU3: 9 / 12 o'clock. Switch on, enter a and d, select ALU, close the hood and wait for the spin to stop. The source table specifies adhesive weights on both rim shoulders.

ALU4: 12 / 12 o'clock. Switch on, enter a and d, select ALU, close the hood and wait for the spin to stop. Fit a clip-on weight at the inner edge and an adhesive weight at the outer shoulder.

ALU5: 9 / 12 o'clock. Switch on, enter a and d, select ALU, close the hood and wait for the spin to stop. Fit an adhesive weight at the inner shoulder and a clip-on weight at the outer edge.

Illustrations and controls - 11

Associated keys and menu symbols

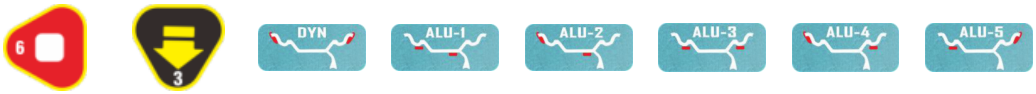

Section from source page 12

STATIC: 12 / 12 o'clock. Switch on, enter a and d, select ALU until the indicator lights, close the hood and wait for the spin to stop. Fit an adhesive weight in the centre of the rim.

ALU-S has two versions, ALUS-1 and ALUS-2. Select the appropriate version with the ALU key.

ALUS-1: 9 / 9 o'clock. Switch on, enter aI, aE and d, close the hood and wait for the spin to stop. Fit adhesive weights at both positions.

ALUS-2: 12 / 9 o'clock. Switch on, enter aI, aE and d, close the hood and wait for the spin to stop. Fit weights at both positions.

5. INDICATIONS AND USE

5.1 DYN (standard/default)

1) Clean the wheel, remove weights and check tyre pressure. Check the rim locating surfaces and mounting holes for deformation. Select the mounting arrangement for the wheel type.

Left: shaft - wheel - cone with small end inward - quick nut. Right: shaft - cone with large end inward - wheel - quick nut.

Attention: a wheel may help hold the threaded hub during fitting. Do not let it scrape along the shaft during fitting or removal.

2) Switch on.

3) Enter a, b and d.

Distance a: move the gauge to the position in Fig. 1 and hold still for approximately 4 seconds until stored. Return the gauge to 0. If necessary, adjust manually using the blue data key and + / -.

Illustrations and controls - 12

Associated keys and menu symbols





12.1



12.2

Section from source page 13

Diameter d: measured automatically with a. If necessary, adjust with the blue data key and + / -. The diameter is marked on the tyre.

Width b: the radar width sensor measures automatically as the hood is lowered (Fig. 2b). Alternatively, read the rim marking or use the width caliper (Fig. 2a), then adjust manually with the blue data key and + / -.

Fig. 1: distance measurement. Fig. 2a: width caliper. Fig. 2b: radar width measurement.

4) Lower the hood to start the measuring spin.

5) The wheel reaches operating speed in a few seconds and the unbalance is measured. The values remain in displays 1 and 2 after stopping. The display-threshold key shows the actual unbalance below the threshold.

6) When the left LED indicator is fully lit, fit the clip-on weight at 12 o'clock (Fig. 3).

7) Press the position-search key to locate the outer unbalance automatically. When the right LED indicator is fully lit, fit the clip-on weight at 12 o'clock (Fig. 4).

Illustrations and controls - 13

Associated keys and menu symbols

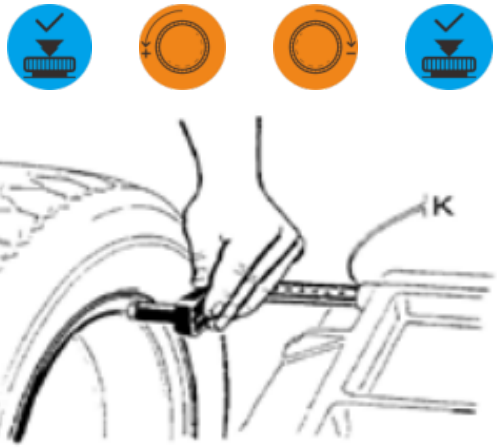

13.1

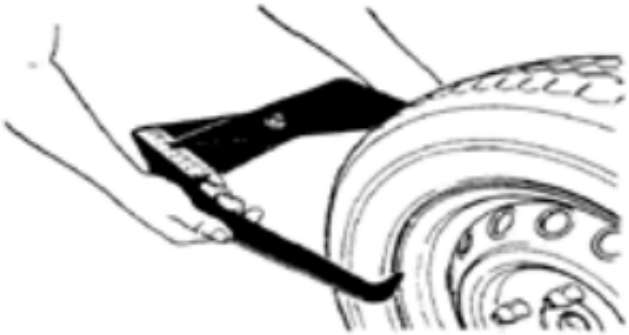

13.2

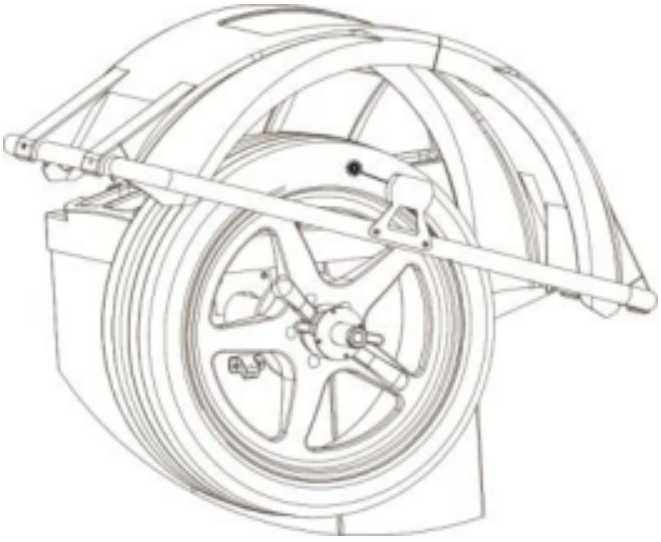

13.3



13.4

Section from source page 14

Fig. 3: inner weight. Fig. 4: outer weight.

8) After fitting the weights, lower the hood and repeat the balancing spin. 00 / 00 indicates successful balancing (Fig. 5).

5.2 ALU-1

ALU1, ALU2, ALU3, ALU4 and ALU5 have the same procedure; only the weight positions differ.

1) Set a, d and b.

2) Press ALU until ALU1 lights.

3) Lower the hood for a measuring spin.

4) Measurement starts at operating speed after a few seconds. The values remain in displays 1 and 2 at rest. Use the threshold key to check the actual value below the threshold.

5) Fully lit LEDs indicate the correct angular position. Fit the inner weight at 9 o'clock as in Fig. 6. The source text refers to the right LEDs in this step; this wording/position discrepancy is retained for traceability.

Illustrations and controls - 14

Associated keys and menu symbols







14.1



14.2

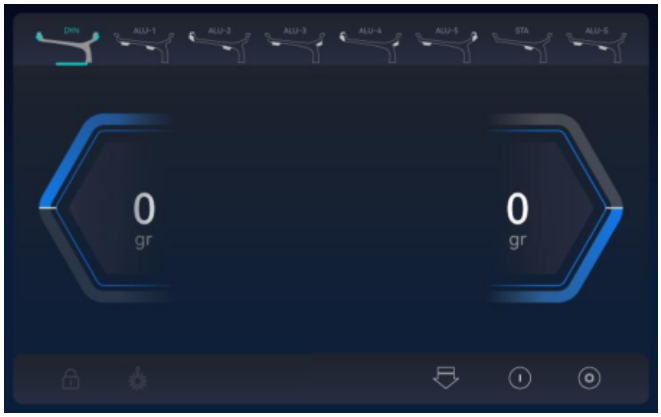

14.3

Section from source page 15

Fig. 6: inner correction position.

6) Press the position-search key to find the outer unbalance automatically. When the outer indicator is fully lit, the intersection of the two laser lines on the outside of the rim at 9 o'clock is the correction point (Fig. 7).

7) After fitting the weights, lower the hood and repeat the spin. 00 / 00 indicates successful balancing (Fig. 8).

Illustrations and controls - 15

Associated keys and menu symbols





15.1



15.2


DYN
ALU-1
ALU-2
ALU-3
ALU-4
ALU-5
STA
ALU-5
25
gr
65
gr

15.3



15.4

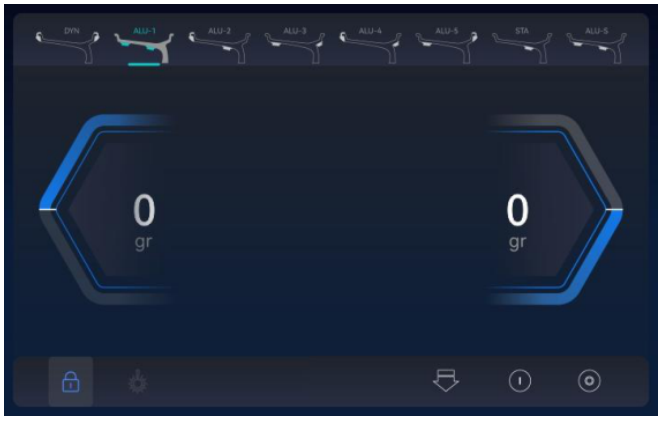
DYN
ALU-1
ALU-2
ALU-3
ALU-4
ALU-5
STA
ALU-5
0
gr
0
gr

15.5

Section from source page 16

5.3 ALU-S

Use this mode for special rims when ALU1/ALU2 cannot be used.

1) Hold the gauge head at aI and aE for approximately 4 seconds each as illustrated. After the beep, aI and aE are automatically read and ALU-S is entered; dI and dE are read simultaneously. Adjust manually with the blue data key and + / - if necessary.

The illustrations distinguish correct and incorrect positions: aI is inner, aE outer.

Note: the weights shown are not yet fitted. They will be added later and are shown only as position references.

Illustrations and controls - 16

Associated keys and menu symbols

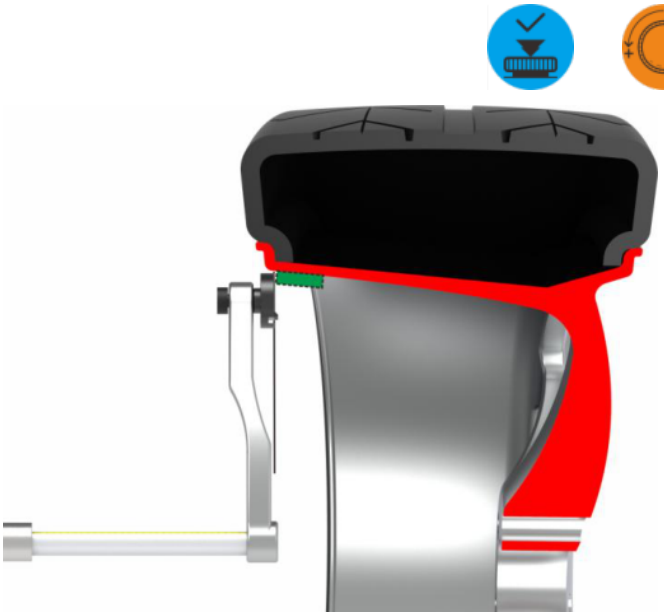

16.1 - Correct (aI)



16.2 - Correct (aE)

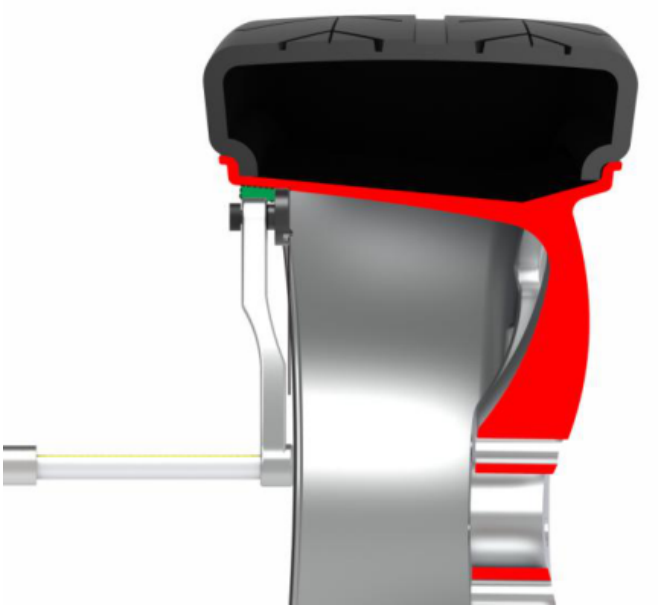

16.3 - Incorrect (aI)



16.4 - Incorrect (aE)

Section from source page 17

Fig. 9: ALU-S data display.

2) Lower the hood for a measuring spin.

3) At rest, the inner unbalance indicator is fully lit. The intersection of the two laser lines on the inside of the rim at 9 o'clock is the correction point (Fig. 10).

4) Press the position-search key to find the outer position automatically. When its indicator is fully lit, the intersection of the two laser lines outside at 9 o'clock is the correction point (Fig. 11).

After fitting the weights, lower the hood and repeat the spin. 00 / 00 means success (Fig. 12).

Illustrations and controls - 17

Associated keys and menu symbols





17.1



17.2



17.3



17.4



17.5

Section from source page 18

Fig. 12: balanced condition, 00 / 00.

5.4 ALUS split function

Only available in ALU-S. The operator must be experienced.

1) In ALU-S, press the settings key shown.

2) Enter the number of spokes with + / -, then press the settings key.

3) Position the next spoke at 12 o'clock; either rotation direction is acceptable. Press the settings key.

Illustrations and controls - 18

Associated keys and menu symbols



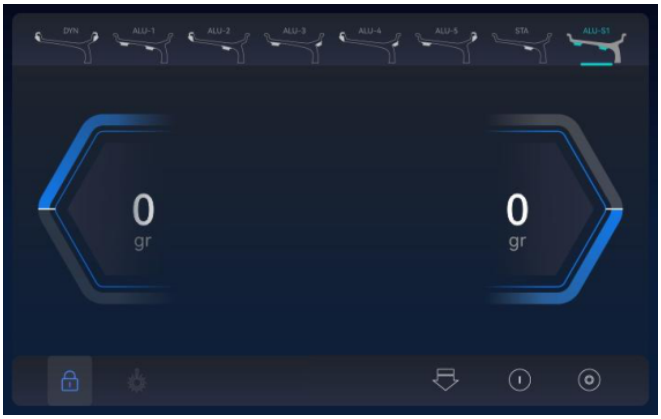

18.1



18.2

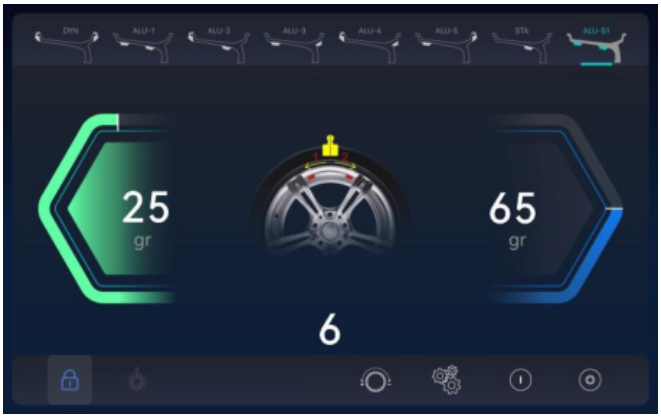

18.3



18.4

Section from source page 19

4) Press position-search until the inner indicator is fully lit. Fit a weight at the intersection of the laser lines.

5) Press position-search until the outer SP1 indicator is fully lit. Fit a weight at the laser intersection.

6) Press position-search until the outer SP2 indicator is fully lit. Fit a weight at the laser intersection.

7) Lower the hood and wait for the spin to stop. The illustrated display confirms successful SP operation.

Illustrations and controls - 19

Associated keys and menu symbols





19.1



19.2



19.3

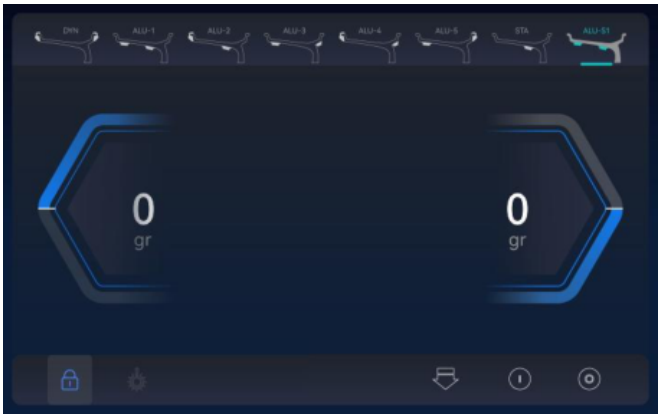

19.4

Section from source page 20

6. SELF-CALIBRATION

6.1 Weight calibration

Calibrate whenever the balancer appears inaccurate. The 100 g calibration weight must be accurate.

Open settings, select the illustrated weight-calibration icon with + / -, and confirm with the blue data key.

1) Press the blue confirmation key to start.

2) Fit a medium-sized wheel (13"-18") suitable for clip-on weights. Enter a, b and d. Close the hood, run a spin and wait for it to stop.

3) Open the hood and clip the 100 g weight on the OUTSIDE at 12 o'clock. Close the hood, run a spin and wait for it to stop.

4) Open the hood, remove the 100 g weight and clip it on the INSIDE at 12 o'clock. Close the hood, run a spin and wait for it to stop.

Illustrations and controls - 20

Associated keys and menu symbols



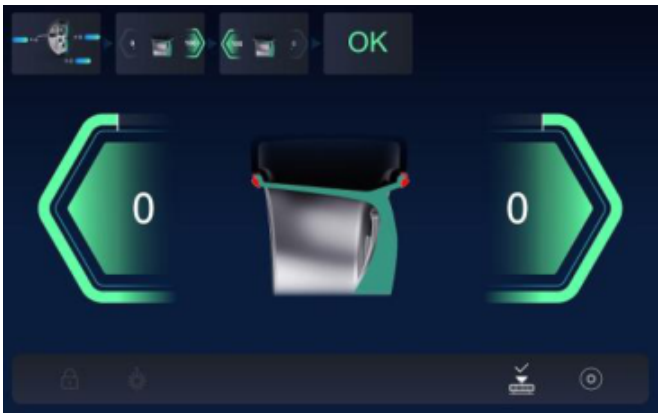

20.1



20.2



20.3

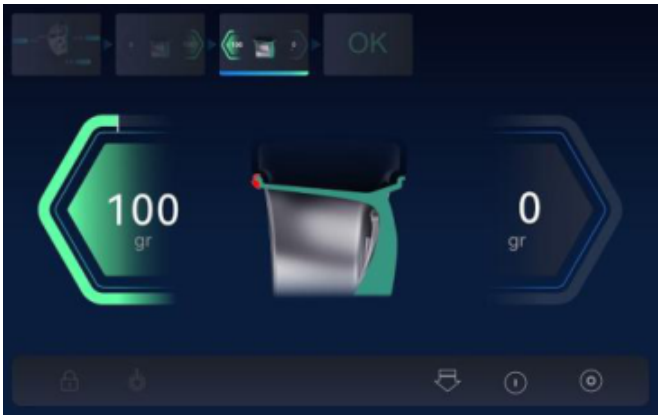

20.4

Section from source page 21

5) Weight calibration is complete.

6.2 Distance-gauge calibration

Open settings, select the illustrated icon with + / -, and confirm with the blue data key.

1) Pull the gauge to 0 and hold; press the blue confirmation key.

2) Pull the gauge to 15 and hold; press the blue confirmation key.

3) Calibration is complete.

Illustrations and controls - 21

Associated keys and menu symbols



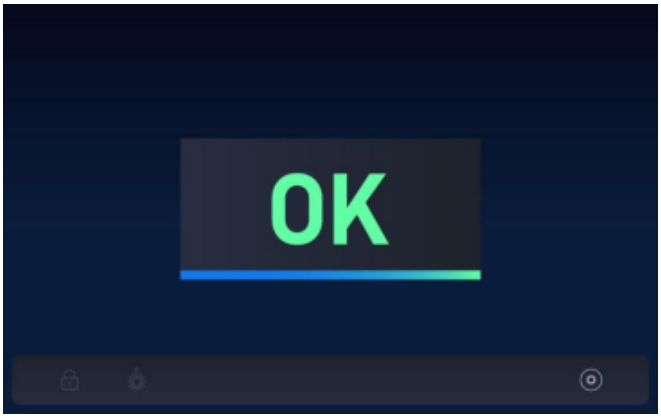

21.1

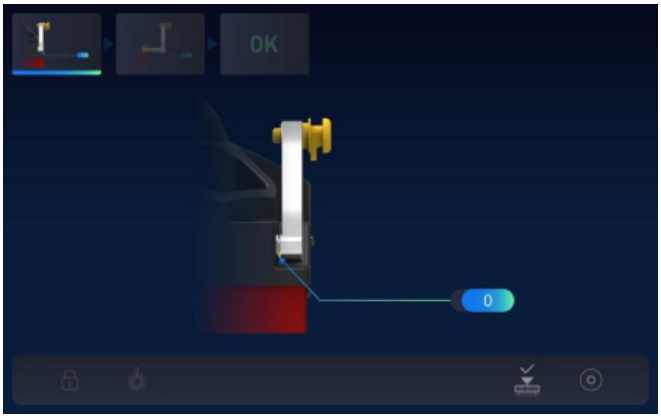

21.2

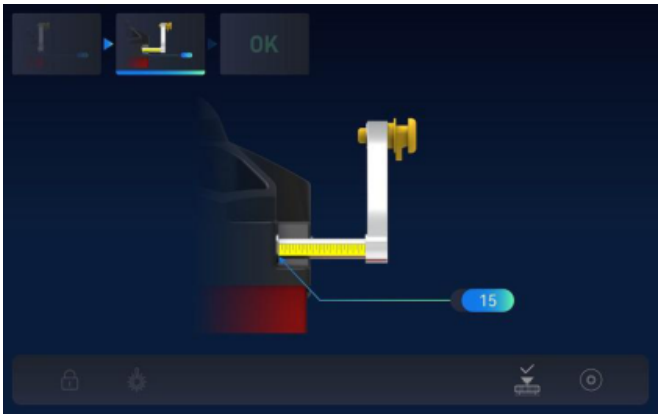

21.3

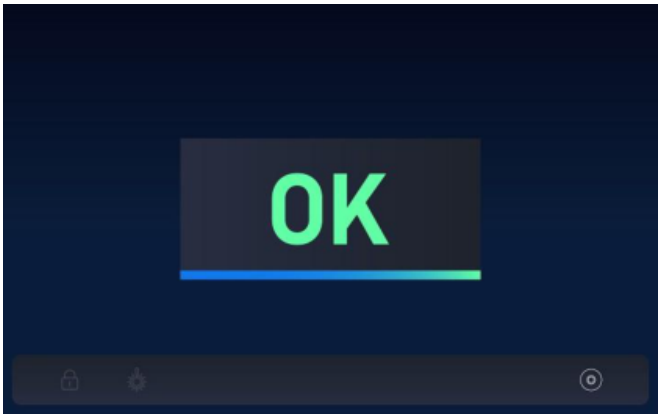

21.4

Section from source page 22

6.3 Diameter-gauge calibration - fit a wheel

Open settings, select the illustrated icon with + / -, and confirm with the blue data key.

1) Enter the diameter with + / -, then confirm with the blue key.

2) Hold the gauge against the rim edge without moving it, then confirm with the blue key.

3) Calibration is complete.

Illustrations and controls - 22

Associated keys and menu symbols





22.1



22.2

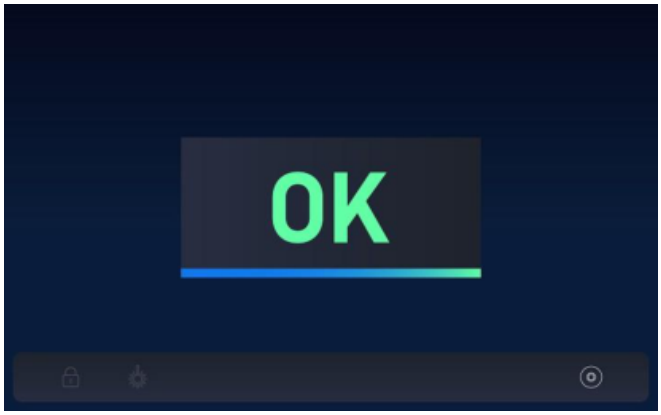

22.3

Section from source page 23

6.4 Radar width-gauge calibration - no wheel required

Open settings, select the illustrated icon with + / -, and confirm with the blue data key.

1) Hold the hood in the illustrated position. Width calibration is completed.

Width compensation

If the radar width measurement still deviates after calibration, compensation is required. Fit a wheel of known width.

1) Enter a.

2) Aim the radar at the tyre.

Illustrations and controls - 23

Associated keys and menu symbols





23.1

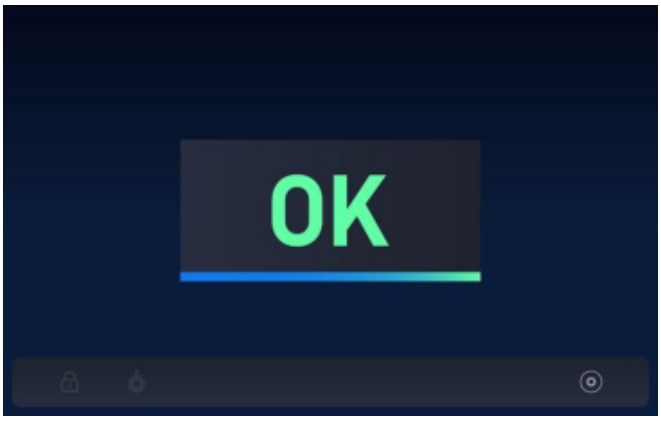

23.2



23.3

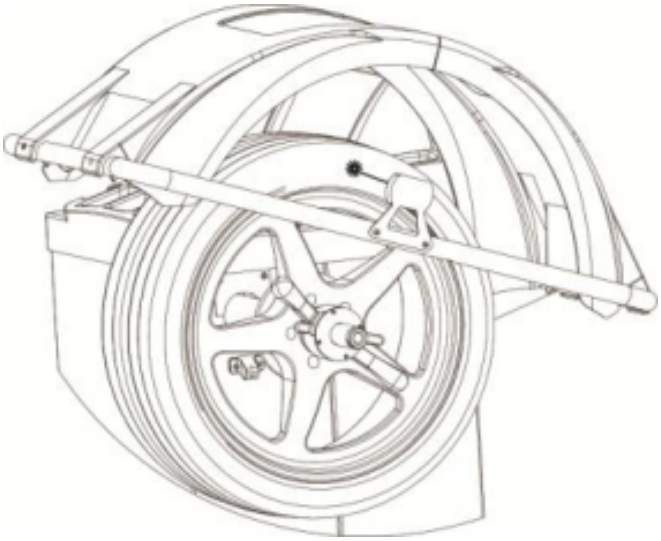

23.4

Section from source page 24

3) Press FINE together with the orange Plus or Minus key (+ / -) to change the known tyre width. Releasing the key saves automatically.

6.5 Laser calibration

Open settings, select the illustrated icon with + / -, and confirm with the blue data key.

1) Confirm with the blue key.

2) Align the laser using + / -.

3) Confirm with the blue key.

Illustrations and controls - 24

Associated keys and menu symbols

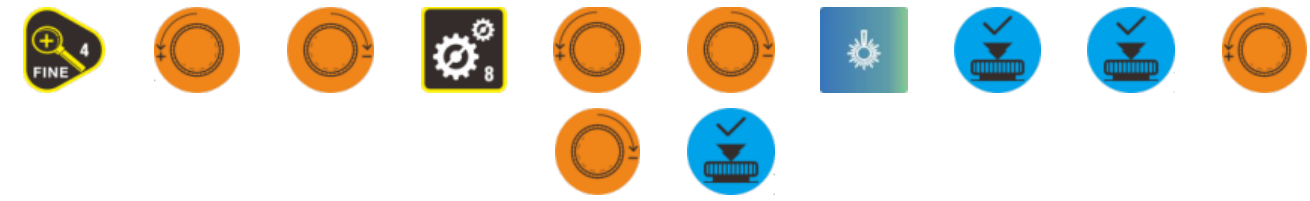

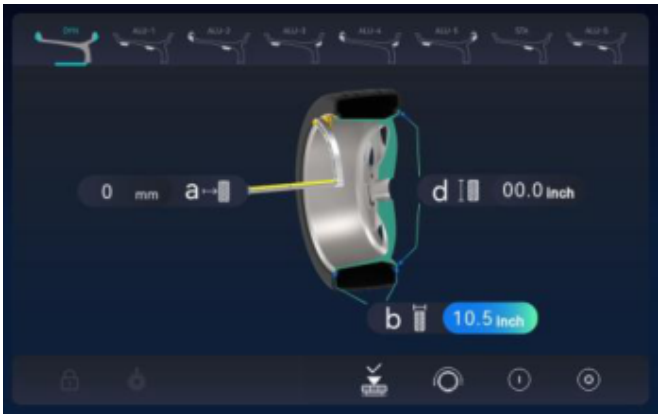

24.1



24.2



24.3

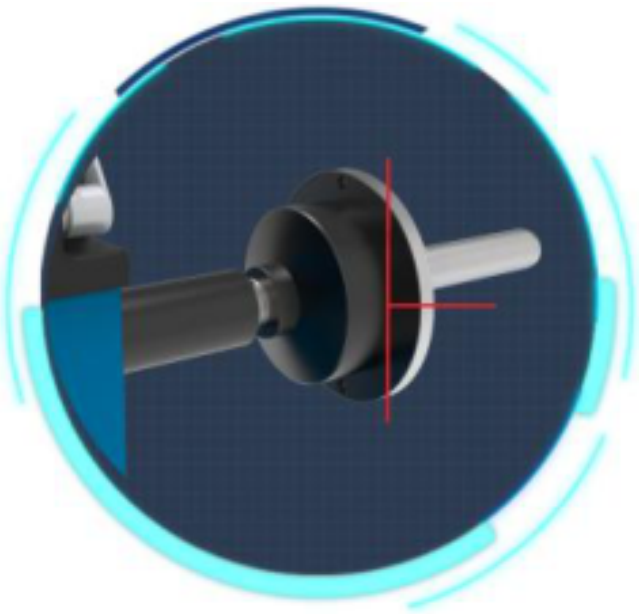

24.4

Section from source page 25

4) Laser calibration is complete.

7. SELF-DIAGNOSIS

Press settings to open the main menu. Change the selection with + / -, confirm with the blue data key, and exit with STOP/cancel.

To open diagnostics: settings, select the illustrated self-diagnosis icon with + / -, then confirm.

Illustrations and controls - 25

Associated keys and menu symbols

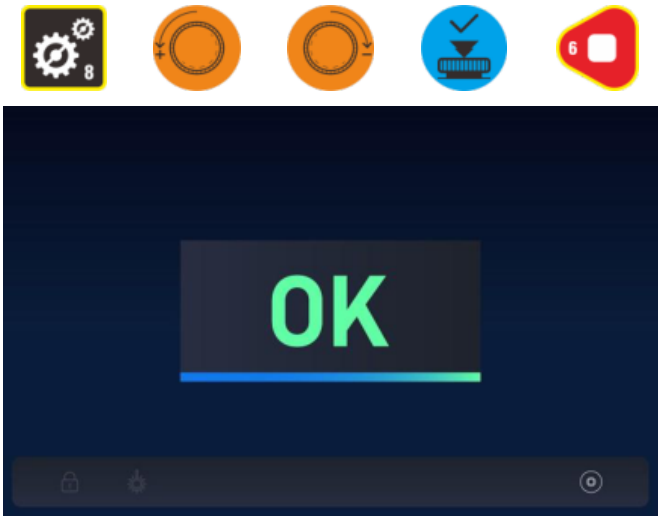

25.1

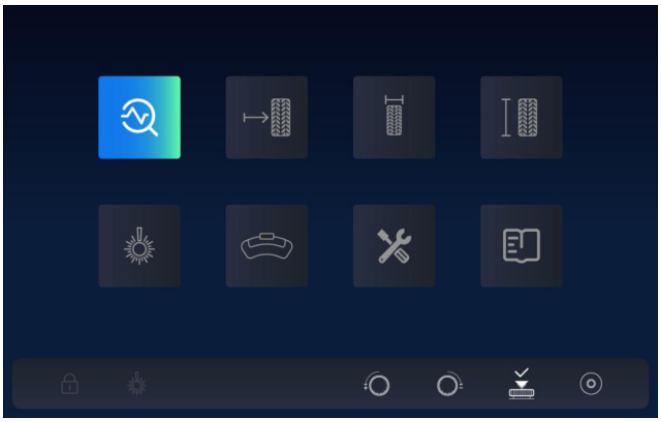

25.2

Section from source page 26

Self-diagnosis - normal indications

1. Position pickup board: POS changes from 0 to 127.
2. Pressure sensor: press the main shaft by hand; 4X-4X and 6X-6X change.
3. Pressure sensor: press the main shaft by hand; 4X-4X and 6X-6X change.
4. Width potentiometer: left window 327-340; readings change when the gauge is turned.
5. Diameter potentiometer: left window 327-340; readings change when the gauge is turned.
6. Distance potentiometer: left window 327-340; readings change when the gauge is pulled out.
7. Laser indicator: numerical angle changes; check whether the indication rotates.

8. MACHINE SETTINGS

Open settings, select the illustrated icon with + / -, and confirm with the blue key.

Illustrations and controls - 26

Associated keys and menu symbols





26.1

Section from source page 27

Settings

1. Weight unit: change with + / -, then press the blue key for the next item.

2. Unbalance display threshold: change with + / -, then press the blue key for the next item.

3. Rim type: change with + / -, then press the blue key for the next item.

9. MOTORCYCLE ADAPTER

Use the motorcycle adapter supplied for this balancer.

Step 1: remove the standard car threaded fitting. Install part No. 9 at A (Fig. 1).

Step 2: install part No. 1 through part No. 9. Lock and secure at C and D (Fig. 2).

Step 3: remove the standard car gauge head. Install part No. 2 at B (Fig. 3).

Illustrations and controls - 27

Associated keys and menu symbols

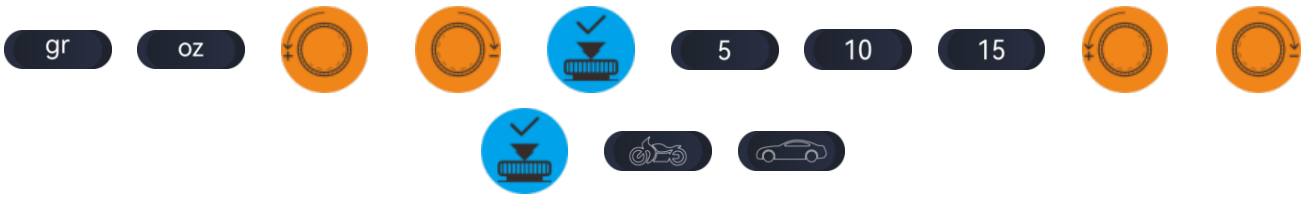

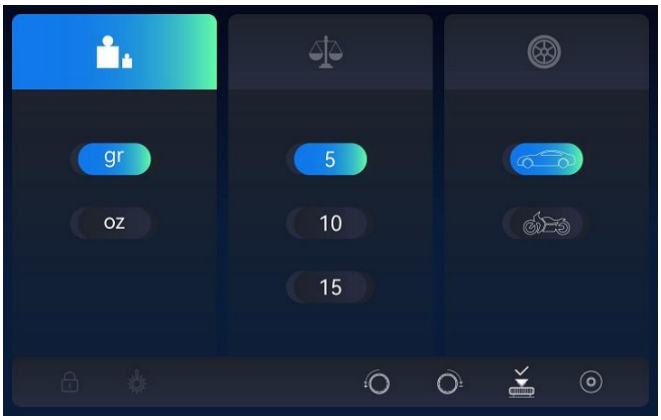

27.1

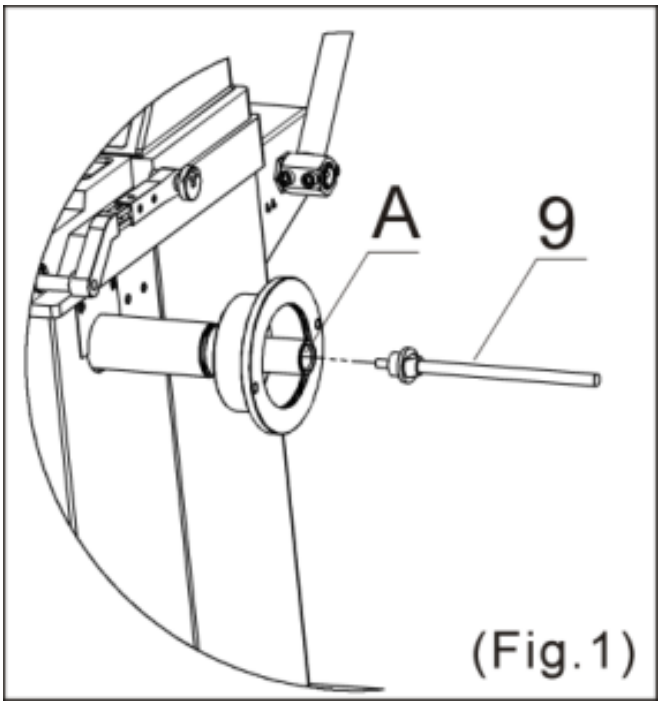

27.2

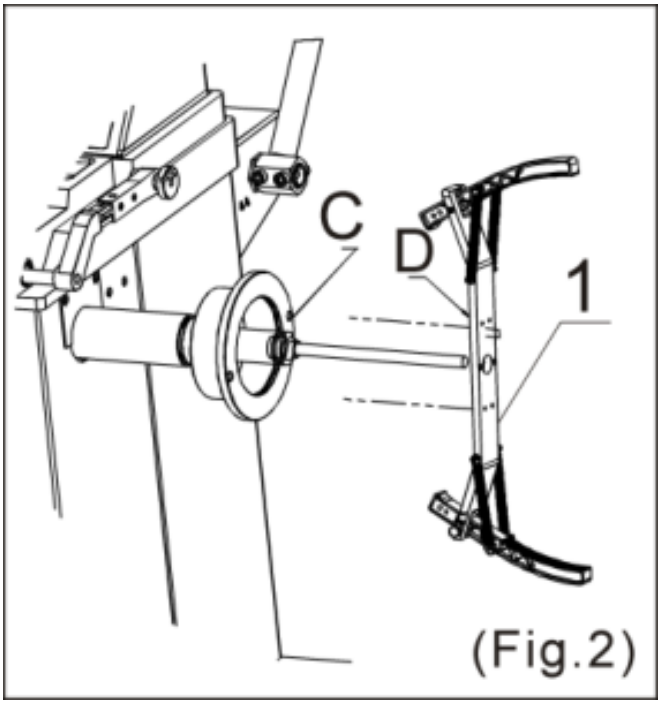

27.3

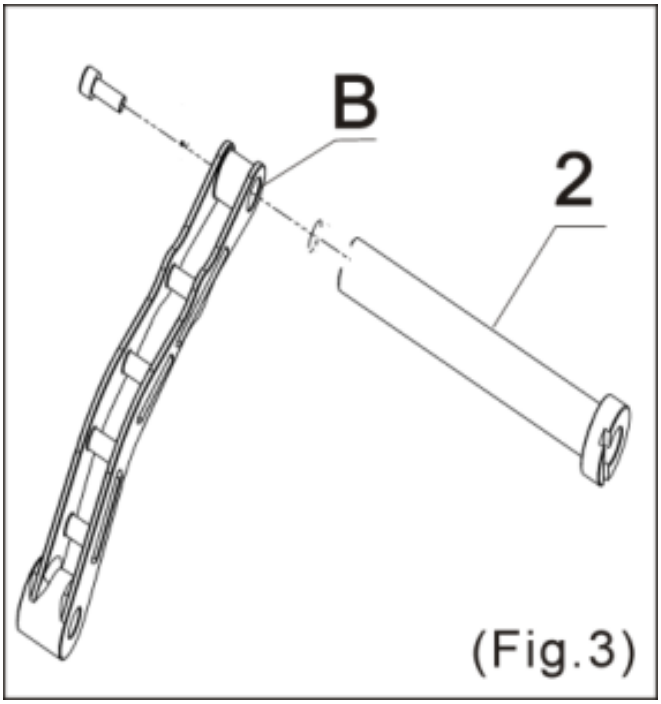

27.4

Section from source page 28

Wheel-type indication at startup

1. Car wheel. 2. Motorcycle wheel. The illustrations show the respective indications.

After switching on, a signal indicates whether car or motorcycle mode is active.

10. OPT FUNCTION

Use OPT for very large unbalance. The operator must be experienced.

1) Select DYN (standard), fit the wheel and enter a, b and d.

2) Lower the hood and run a measuring spin.

3) Press STOP and the display-threshold key together as illustrated.

Illustrations and controls - 28

Associated keys and menu symbols



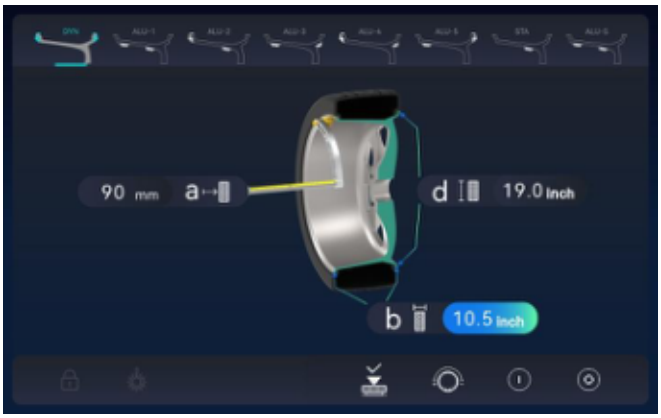

28.1



28.2



28.3

Section from source page 29

4) Press the settings key.

5) Use a tyre changer to rotate the tyre by 180° relative to the rim.

6) Lower the hood and press START.

7) Turn the wheel until the indicators light. Mark C, the laser position, on the rim with chalk.

8) Press position-search to turn the wheel until the indicators light. Mark D, the laser position, on the tyre with chalk.

9) Press settings, then use a tyre changer to align C and D.

10) Lower the hood and press START. OPT succeeds if the unbalance is lower than before.

Illustrations and controls - 29

Associated keys and menu symbols



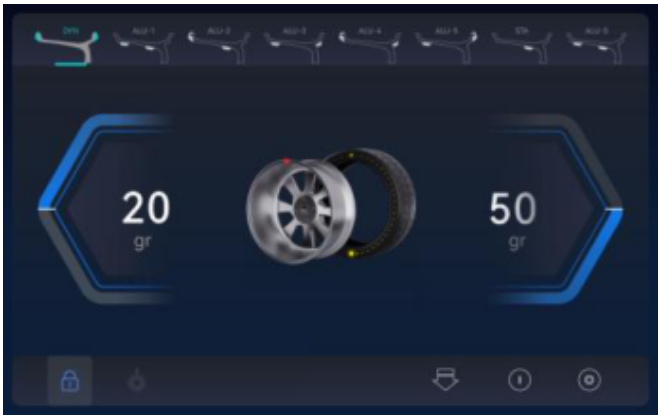

29.1

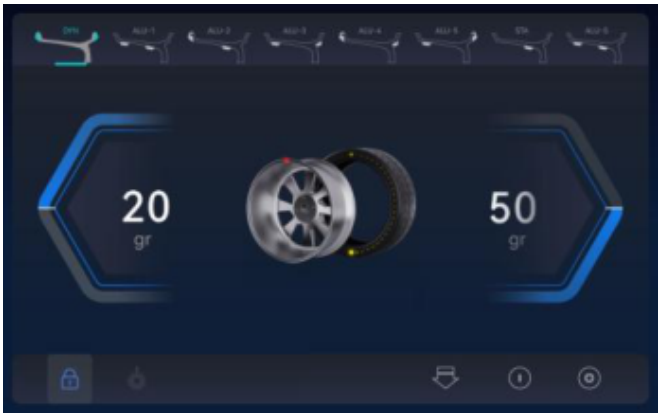

29.2



29.3



29.4



29.5



29.6

Section from source page 30

11. MANUAL AND VIDEO

Open settings, select the illustrated icon with + / -, and confirm with the blue key. Select with + / -, enter with the blue key and exit with STOP/cancel.

Menu entries: customer's manual; English description; operation video.

12. ERRORS

The microprocessor can detect various abnormal conditions. Stop operation when an error appears, identify the cause and apply the corresponding remedy. Contact the supplier if the error persists.

Numbers correspond to the illustrated error screens.

1. Causes: no rotation / shaft rotates. Remedies: if stationary, check or replace the power board. If rotating, check or replace the position pickup board and computer board. Adjust the position-board support.

2. Causes: no wheel or wheel not tightly secured; position-board fault. Remedies: secure the wheel; check or replace the position board.

3. Causes: insufficient tyre pressure; distorted wheel. Remedies: inflate correctly; check the wheel.

4. Causes: position-board or computer-board fault. Remedies: check or replace the corresponding board.

Illustrations and controls - 30

Associated keys and menu symbols

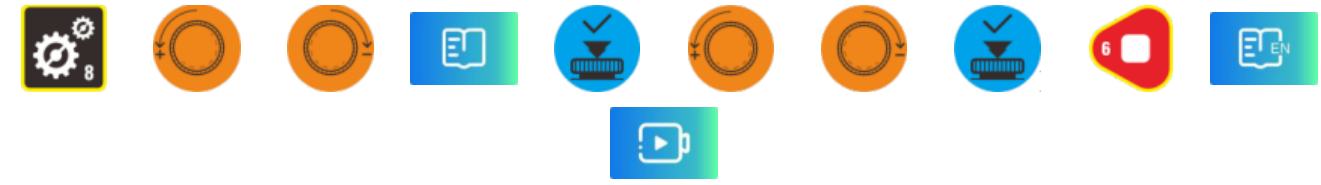

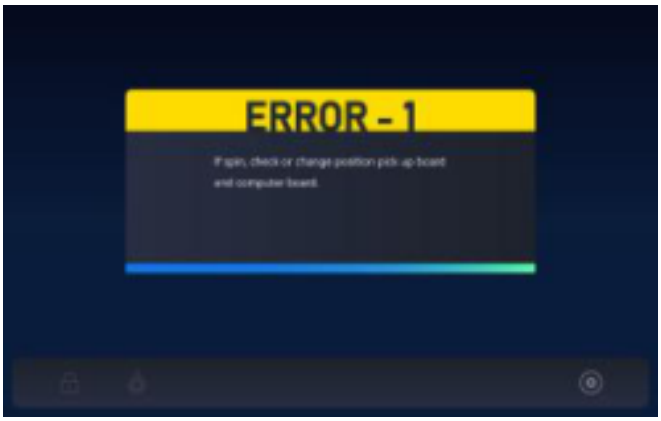

30.1

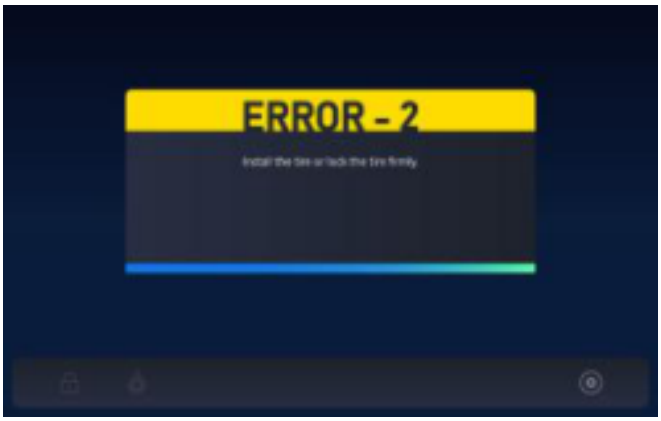

30.2

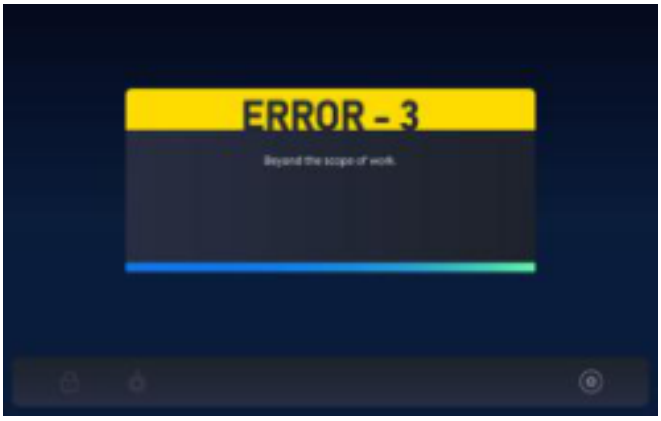
ERROR - 3
Beyond the scope of work.

30.3

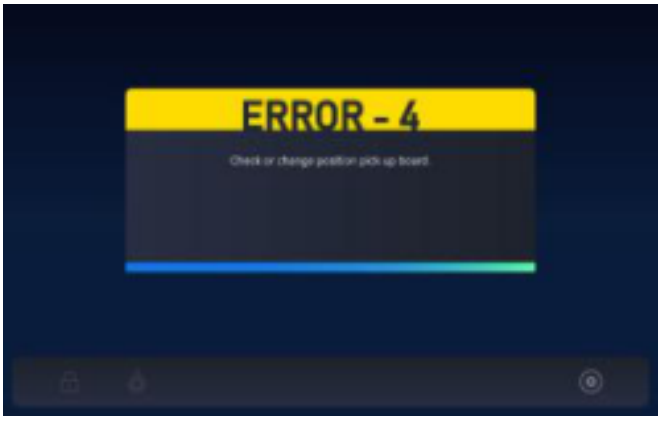
ERROR - 4
Check or change position pick up board.

30.4

Section from source page 31

5. Causes: microswitch or computer-board fault. Remedies: check or replace the microswitch or computer board.

6. Causes: power-board or computer-board fault. Remedies: check or replace the corresponding board.

7. Causes: lost program; computer-board fault. Remedies: self-calibrate; check or replace the computer board.

8. Causes: 100 g weight not added during calibration; computer-board or power-board fault. Remedies: add 100 g; check or replace the computer board; check or replace the power board.

9. Emergency stop. Remedy indicated by the source: return.

10. Data protection. Remedies: contact the supplier to unlock; update data.

11. Data protection. Remedies: contact the supplier to unlock; update data.

12. Locking malfunction. Remedy: check the switch.

Illustrations and controls - 31

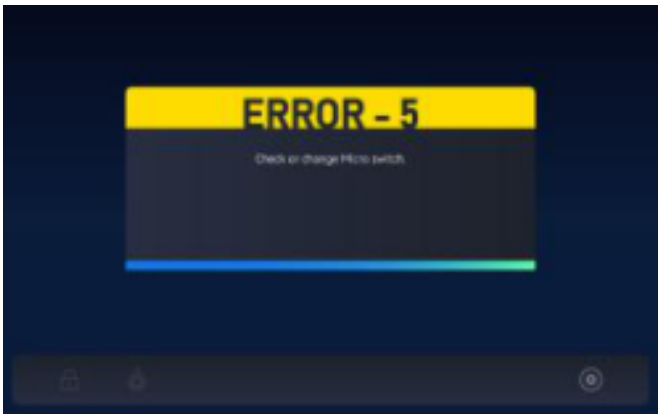

31.1

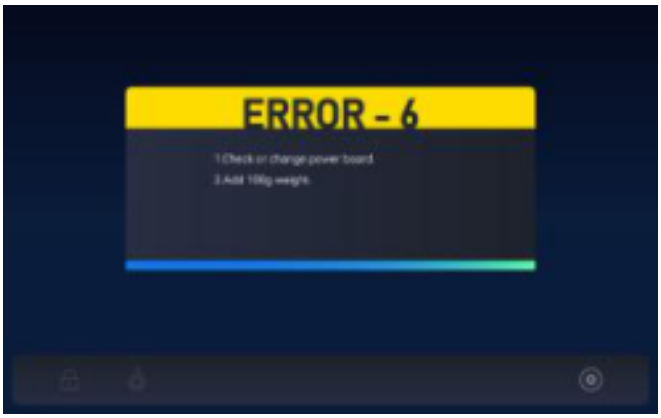

31.2

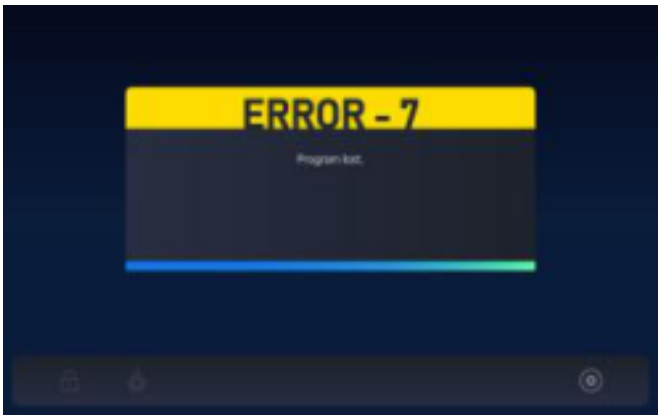

31.3

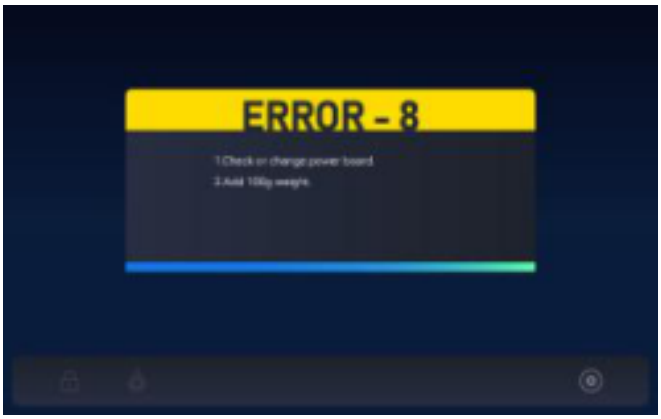

31.4

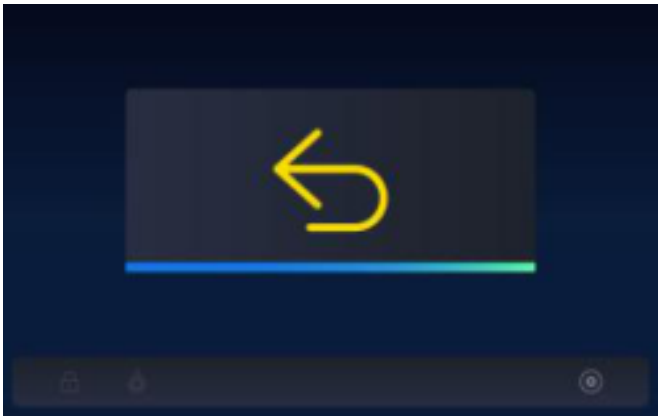

31.5

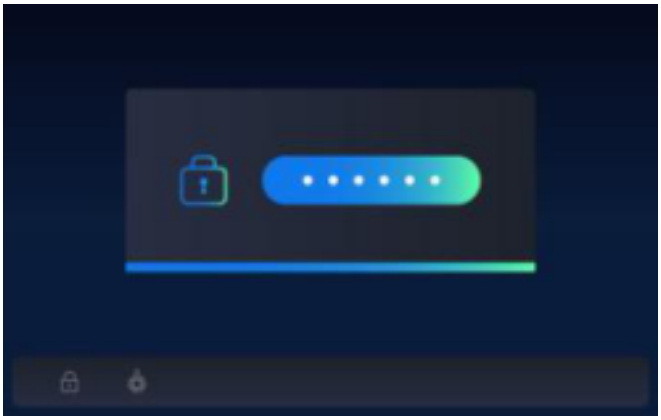

31.6

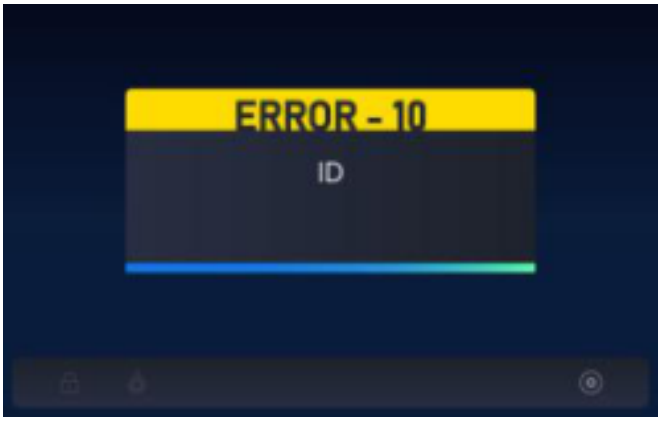

31.7

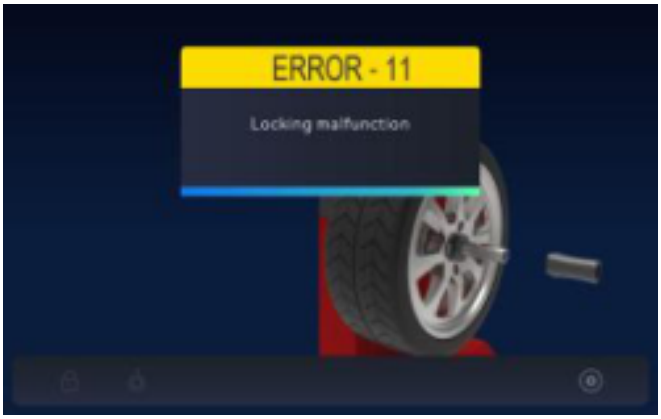

31.8

Section from source page 32

13. Causes: computer-board or power-board fault. Remedies: check or replace the corresponding boards.

13. LANGUAGE SELECTION

Hold the settings key while switching on. Release it when the setup page appears. Red numbers appear in the upper left of the screen.

Select with + / -, save with ALU and exit with STOP/cancel.

000: language off.

001: Mandarin.

002: English.

003: Russian.

004: Polish.

005: German.

006: Lithuanian.

007: Czech.

008: Portuguese.

Illustrations and controls - 32

Associated keys and menu symbols



32.1