Model: Parkbühne 4.2T Four

●Four post car parking lift

●Manual lock release

●Lifting capacity: 4200Kg

Installation, Operation and Maintenance

Instruction Manual

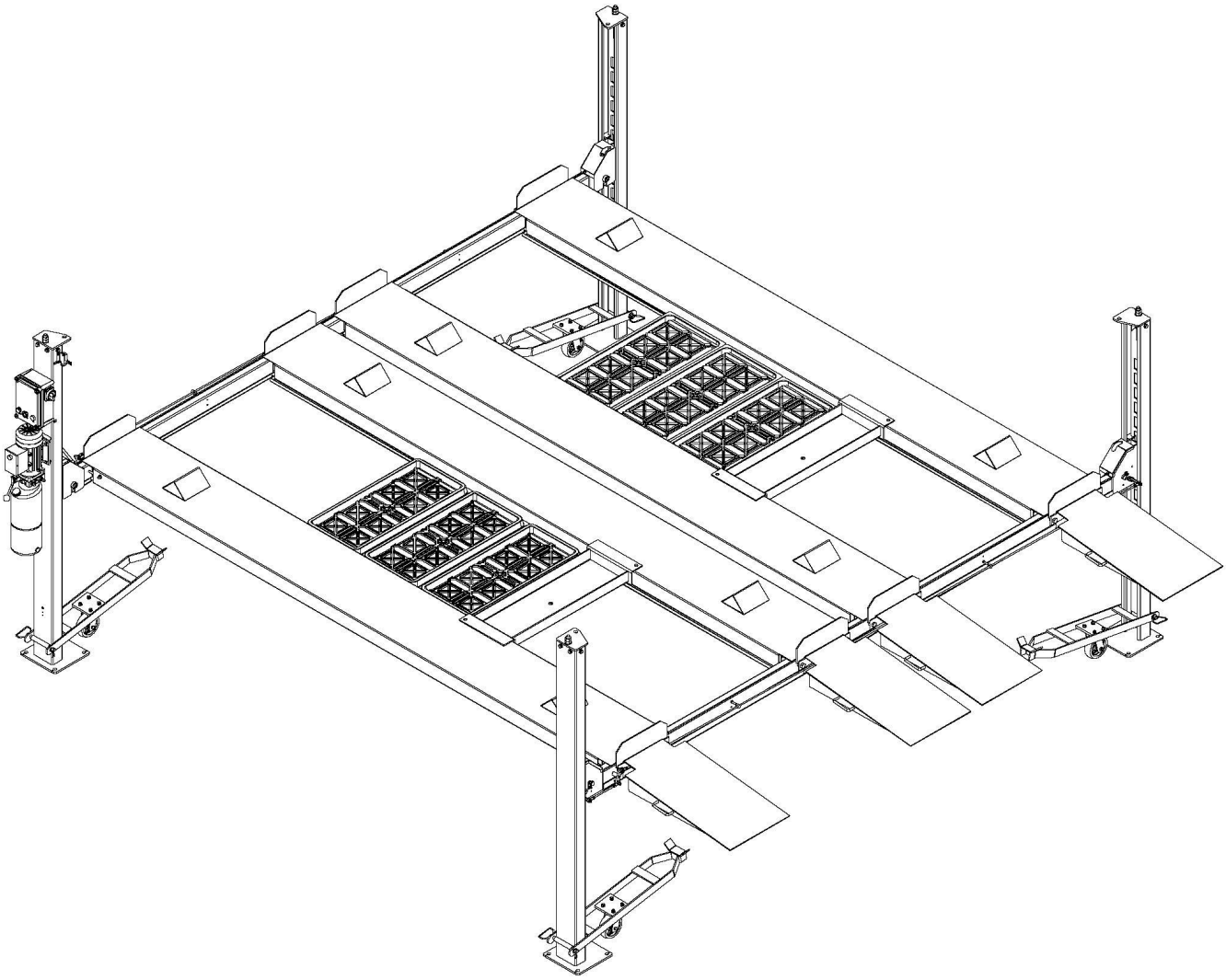

The instruction is part of the product. Please put it somewhere you can find it any time. Read the complete instructions carefully and then start to install, operate and maintain.

The manufacturer and the dealers will not be responsible for any accidents caused by customer's arbitrary modification of the accessories or wrong operation.

Contents

1. Safety Instructions.....

1.1 Important statement

1.2 Qualified operators and instructions

1.3 Safety precautions

1.4 Warning signs

1.5 The noise standard

2. Product introduction.....

2.1 Product description

2.2 Technical Data

2.3 The main structure of the whole machine

3. Installation.....

3.1 Pre-installation

3.1.1 Tools

3.1.2 Ground requirements

3.1.3 Check the parts

3.2 Precautions during installation

3.3 Instruction of installation steps

3.4 Check the considerations after installation

4. Operation.....

4.1 Instructions for operation notes

4.2 Operation flow chart

4.3 Control box interface

4.4 Operation instructions

5. Problem diagnosis and solution.....

6. Maintenance instruction.....

7. Enclosure.....

Enclosure 1 Packing list of the whole machine

Appendix 2: Dimensions

Enclosure 3 Installation drawing of foundation

Enclosure 4 Hydraulic schematic

Enclosure 5 Electrical schematic diagram

Safety Instructions

1.1 Important statement

Hammer Tools provides a one-year warranty for this lift. Contact Hammer Tools if a quality defect occurs within this period. Damage caused by incorrect installation or operation, overloading, an unsuitable concrete foundation, normal wear or insufficient maintenance is excluded.

This lift is intended exclusively for parking vehicles. No other use is permitted. The supplier and dealer are not liable for damage caused by use outside this intended purpose.

●Be sure to pay attention to the tonnage mark on the machine and shall not attempt to lift the vehicle beyond the rated lifting weight.

●Please read the manual carefully before installation and operation of the lifting machine so as to avoid any loss of property or even personal injury caused by improper operation.

●Any user may not alter the control part of the machine or other mechanical parts without the permission of the manufacturer.

1.2 Qualified operator and instructions for use

1.2.1 Professional trained personnel can operate the lift.

1.2.2 Electrical connections must be operated by personnel with electrical qualifications.

1.2.3 Untrained persons must not operate the lift.

1.3 Safety precautions

1.3.1 Do not install the lift on asphalt. The thickness of the concrete must meet the requirements.

1.3.2 Before you operate the lift, read and understand the instructions for safety operation carefully.

1.3.3 This lift is intended for indoor use unless an outdoor version has been specifically supplied.

1.3.4 Keep hands and feet away from moving parts, especially while the lift is being lowered.

1.3.5 Professional trained personnel can operate the lift.

1.3.6 The operator is not allowed to wear loose clothing so as not to be caught in the moving parts during the lifting of the machine.

1.3.7 Keep the lift and surrounding area clean and free of stored objects or other obstructions.

1.3.8 Before parking another vehicle below the platform, make sure all mechanical safety locks are fully engaged. This lift is for parking only.

1.3.9 Regularly inspect all parts for damage. Check that the lift moves freely and evenly. Carry out the required maintenance. Stop using the lift immediately if anything is abnormal and contact the dealer.

1.3.10 Please lower the machine to the minimum while there is no vehicles under the machine.

1.3.11 Without the permission of the manufacturer, the parts of the parking lift shall not be changed.

1.3.14 If the machine is not used for a long time, the user needs

A. Disconnect the power supply. B. Drain and collect the hydraulic oil. C. Lubricate moving parts with hydraulic oil.

Attention

WARNING: Incorrect installation, operation or unauthorized modification of this parking lift can cause serious injury or death. Read and follow this manual. Collect hydraulic fluids and dispose of them correctly to protect the environment.

1.4 Warning signs

All safety warning signs presented on the machine with the purpose to draw the operator’s attention from dangerous or unsafe situations. The labels must be kept clean and they have to be replaced if detached or damaged. Read the meaning of the labels carefully and memorize it.


PRECAUTIONS
FOR SAFE OPERATION
WARNING
Only trained personnel should operate the lift.
WARNING
Read all safety caution, and warning instructions before operating lifts.
WARNING
The lifting vehicle must not exceed the rated load.
WARNING
LOCKING
It is not allowed to work under the vehicle if safety teeth are not engaged.
WARNING
Do not drive away until the lift has fully lowered.
WARNING
When operating the lift, pay close attention to the entire lifting process.
WARNING
Always keep lifitng area clear when raising or lowering a vehicle.
WARNING
Keep feet away from lift while lowering.
WARNING
Do not go into the car or climb onto the lift during raising or lowering.
WARNING
Do not modify any safety system of lift.
WARNING
Avoid excessive rocking of vehicle while on lift.
WARNING
Carry out maintenance regularly as indicated in the manual.

Meaning of the safety pictograms

Read left to right, row by row, from top to bottom.

1. Only trained personnel may operate the lift.

2. Read all safety and operating instructions before use.

3. Never exceed the rated capacity.

4. Mechanical safety locks must be fully engaged before anyone enters beneath a raised platform.

5. Do not drive off the lift until it is fully lowered.

6. Watch the entire lifting and lowering movement carefully.

7. Keep the danger area clear during raising and lowering.

8. Keep feet away from the lift during lowering.

9. Do not enter the vehicle or climb onto the lift while it is moving.

10. Do not modify any safety device.

11. Avoid excessive rocking or shaking of the raised vehicle.

12. Carry out regular maintenance as specified in this manual.

The Four is exclusively a parking lift. The general locking pictogram does not authorize repair work beneath a vehicle.

1.5 Noise standard

Lifting machine noise should be less than 75dB, for your health sake, it is recommended to put a noise meter in your work area, observe the noise of the lifting machine at any time.

Product Introduction

2.1 Product description:

A: The four post parking lift is composed with master/auxiliary columns, beam, deck plate, ramp, safety system, hydraulic cylinder, power unit and control box(optional).

B: When the power unit is turned on and the gear pump works, the hydraulic oil pushes the piston rod of cylinder to work. During the movement of the cylinder, the steel wire rope is driven to move. Because the steel wire rope pulls the deck plate and the cross beam, the vertical movement of the parking lift is realized, and then the lifting is achieved.

C: The safety lock block of the safety mechanism will automatically engage with the rack in the column during each ascent process to ensure that it will not slip off due to the failure of the hydraulic system.

Safety instruction

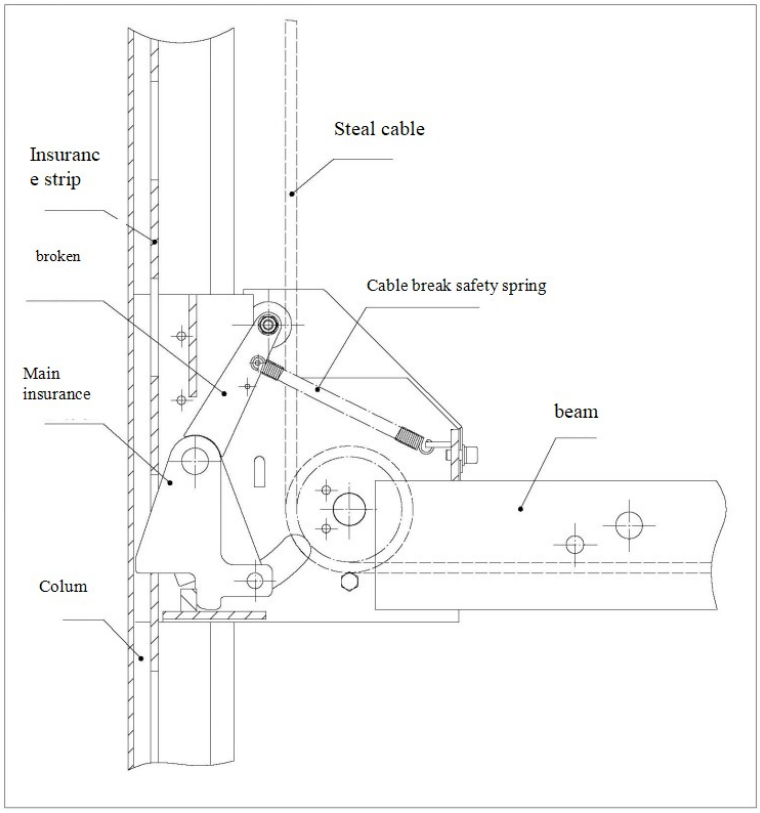

2.2 Technical data

Model name	Max lifting weight	Up/down time	Max lifting height	Column height	Total width	Total length
Parkbühne 4.2T Four	4200kg	<60s	1880mm	2190mm	4885mm	5444mm

2.3 The main structure of the whole machine

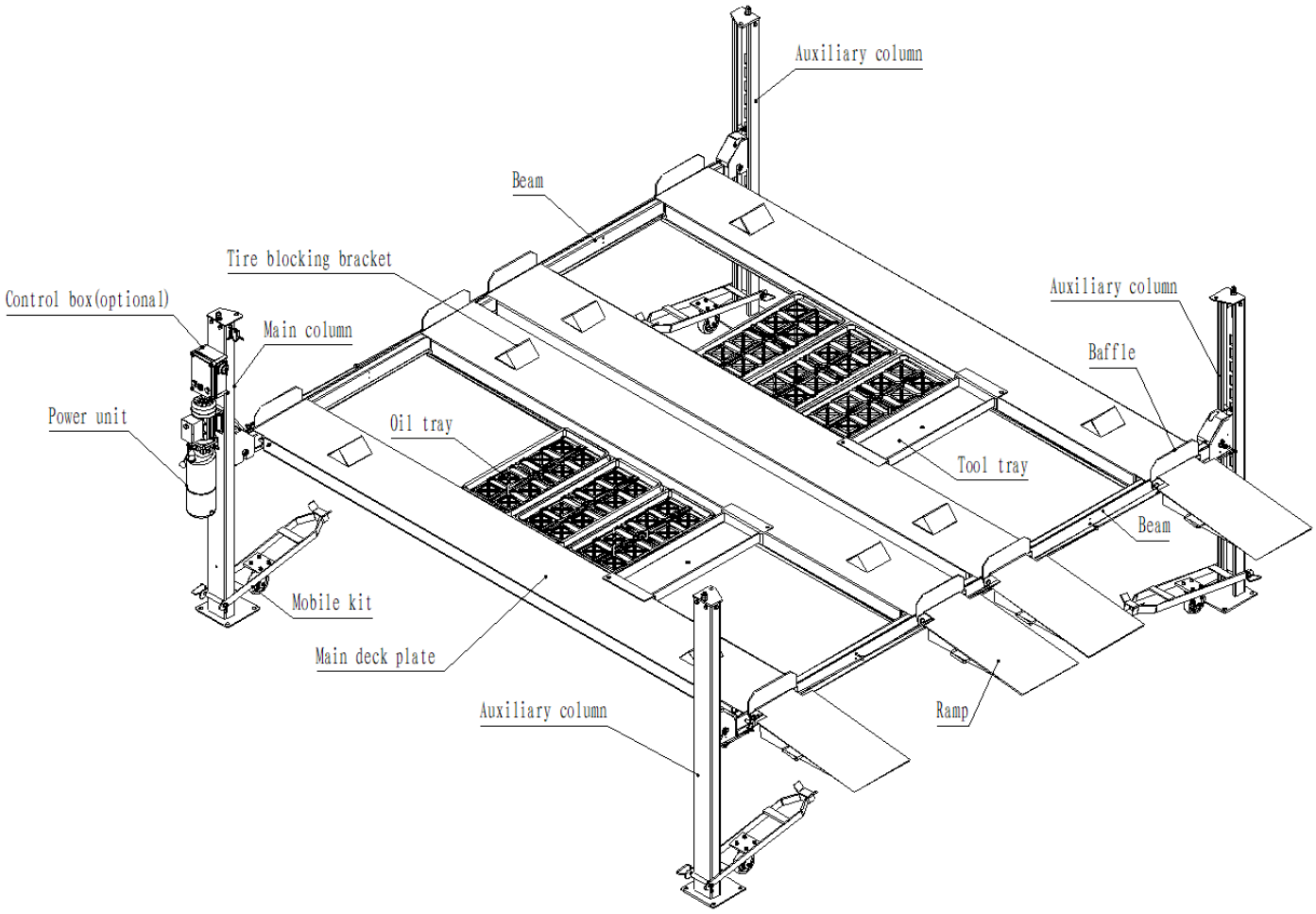
Auxiliary column
Beam
Tire blocking bracket
Control box(optional)
Main column
Auxiliary column
Baffle
Power unit
Oil tray
Tool tray
Beam
Mobile kit
Main deck plate
Auxiliary column
Ramp

Installation

3.1 Before installation

3.1.1 Tools

Required tools: 1. Lifting equipment; 2. 10 L anti-wear hydraulic oil (supply quantity, see filling instructions); 3. Electric drill; 4. Chalk; 5. Measuring tape; 6. Magnetic plumb bob; 7. 8 m water-level hose, diameter 15 mm; 8. Open-ended spanner set; 9. Hex key set; 10. Phillips screwdriver; 11. Flat-blade screwdriver; 12. Needle-nose pliers; 13. 17, 19 and 22 mm sockets; 14. 4 lb hammer; 15. Circlip pliers; 16. Eight timber blocks, 100 x 100 x 700 mm; 17. Four timber blocks, 80 x 80 x 400 mm.

3.1.2 Ground requirement

Install the lift on a solid, level concrete foundation. Concrete strength must exceed C20/25, the level deviation must be less than 5 mm and the thickness must be at least 300 mm. Newly poured concrete must cure for more than 20 days before installation.

3.1.3 Check accessories

Unpack the lift and check every item against the packing list in Appendix 1. If parts are missing or damaged, contact the supplier before proceeding. Continuing installation despite missing or damaged parts is at the installer's risk.

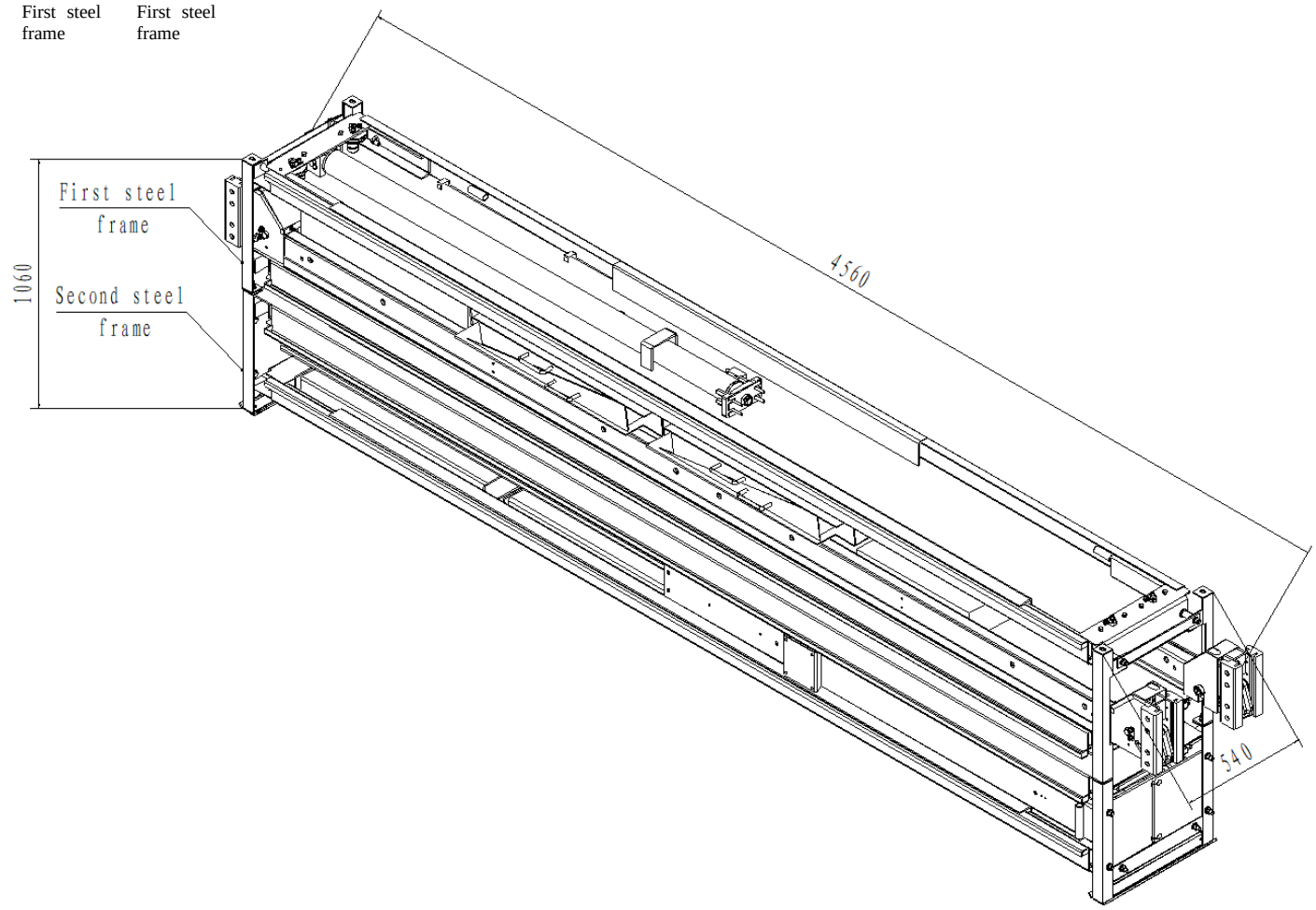



Package size

3.2 Precautions during installation

During installation, ensure that all four columns are vertical and correctly aligned. Do not install them at an angle.

▲ hydraulic hose and steel cable connection, the joint must be connected in place, so as to avoid oil leakage and steel cable loose.

▲ All bolts and nuts must be tightened to ensure fastening.

▲ No vehicles shall be placed during the test.

3.3 Installation steps

Step 1: Choose a suitable location:

The parking lift is for indoor use only. Install it on solid concrete, never across expansion joints. Installation on an upper floor requires approval by a qualified structural specialist.

Step 2: Determine the installation location, and move the parking lift to the installation site with a crane.

Step 3: Unpacking

<1>: Statement: Two steel frames connect to total one package for the parking lift.

Use a crane to lift the steel frame, remove the screws connecting the two steel frames, and place the first steel frame on the pre-placed wooden slats on the ground (the thickness of the wooden slats must be more than 100mm). The bottom of the steel frame is off the ground.

<2>: Remove the packaging material of the first steel frame:

<3>: Take out the safety system installation package and "spare parts box" and put them in an open space

<4>: Remove the connecting screws of the upper main deck plate and the packaging frame, use a crane to lift the upper main deck plate down, and then put it in an open space.

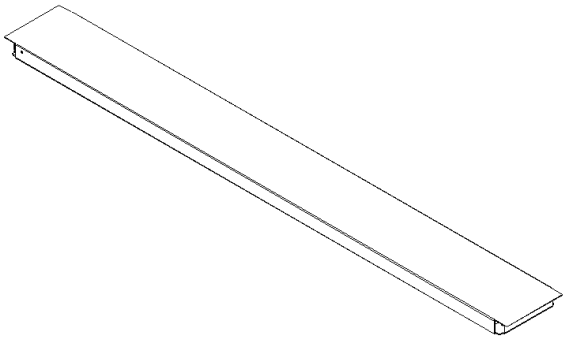

main deck plate 1 piece

<5> Take out 4 "ramps", 6 "oil drip tray", 8 "front and rear baffles", 8 "stop baffles", 1 "accessory box", and 1 "control box" ,
1 piece of "power unit", 2 pieces main top plate welding parts, and 2 pieces auxiliary top plate welding parts, put them in an open space.

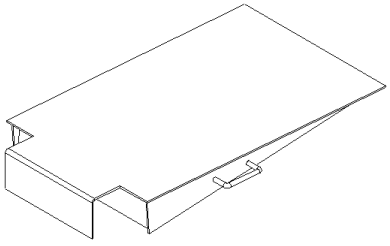

Ramps 4pcs

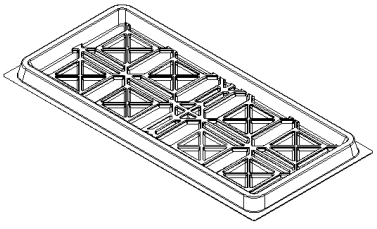

oil drip tray 6pcs

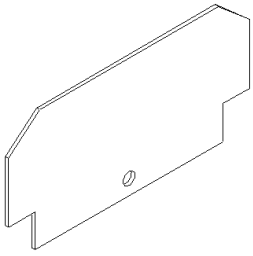

front and rear baffles 8pcs

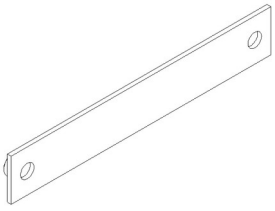

stop baffle 8pcs

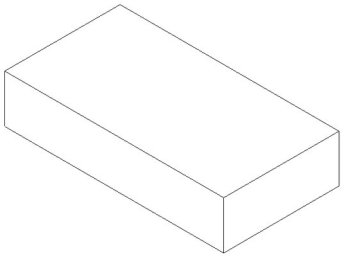

accessory box 1piece

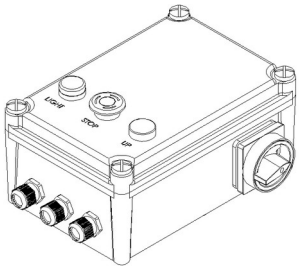

control box 1 piece (optional)

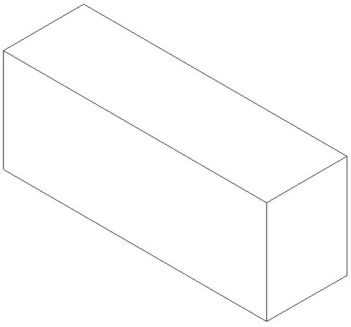

power unit 1 piece

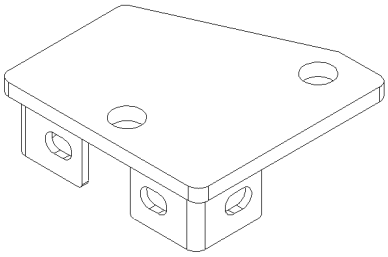

main top plate 2pcs

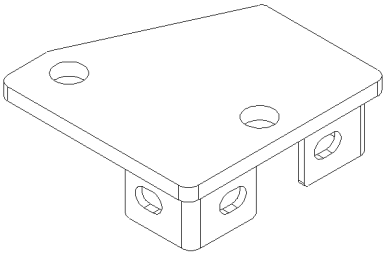

auxiliary top plate 2pcs

<6>: Use a crane to put the parking four-post beam to a empty place

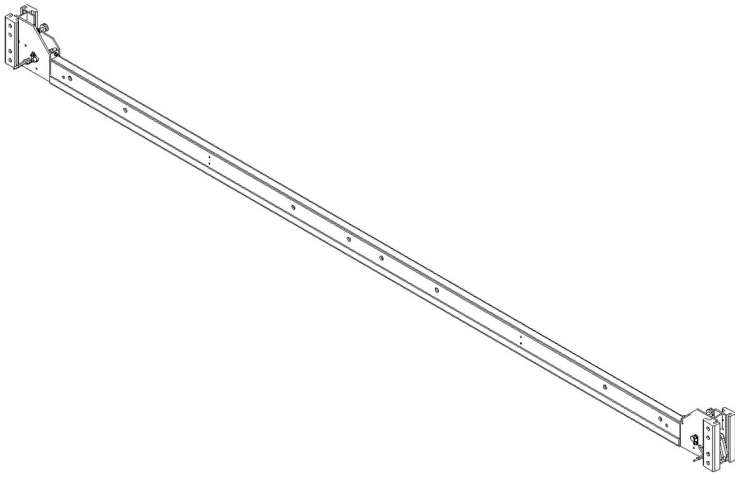

<7> Remove the screws of the auxiliary deck plate of the first frame, and put the first auxiliary deck plate in an open space.

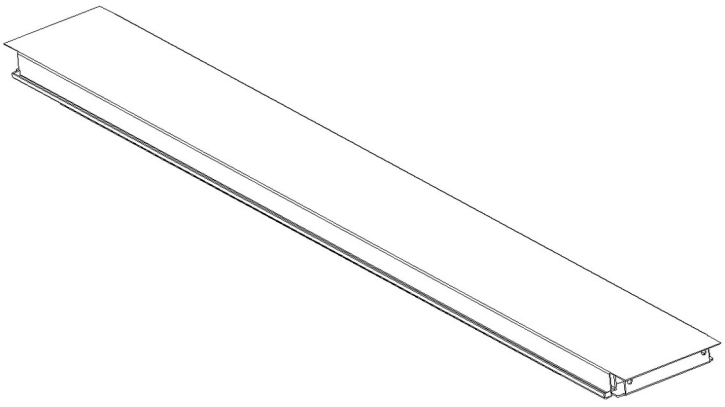

first auxiliary deck plate

<8> Use a crane to lift the second steel frame and place it on the pre-placed wooden slats on the ground (the thickness of the wooden slats must be

more than 100mm), the purpose is to make the bottom of the frame off the ground, and use the crane to lift the first auxiliary deck plate of the second frame. Remove the connecting screws between the upper auxiliary deck plate and the packaging frame then put it in an open space.

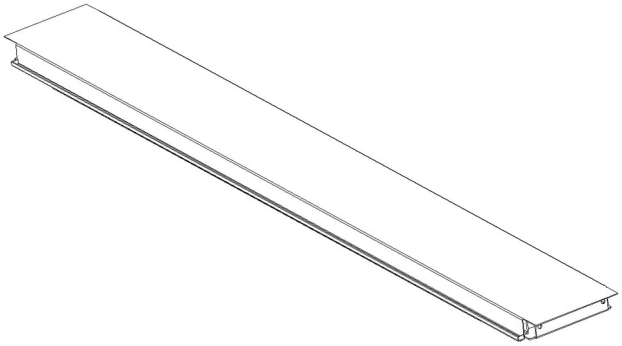

Second auxiliary deck plate

<9> Take out: 8 pieces of tire blocking bracket, 2 pieces of end cover A of the four-parking beam, 2 pieces of end cover B of the four-parking beam, 4 pieces of safety blocks, 4 pieces of the four-parking mobile wheel kit, put them in an open space

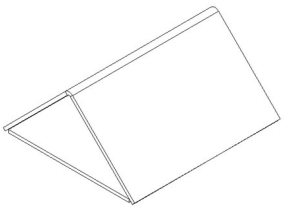

tire blocking bracket 8pcs

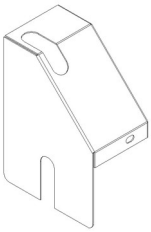

end cover A of the four-parking beam 2pcs

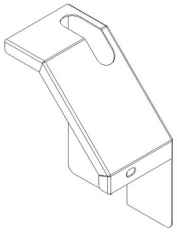

end cover B of the four-parking beam 2pcs

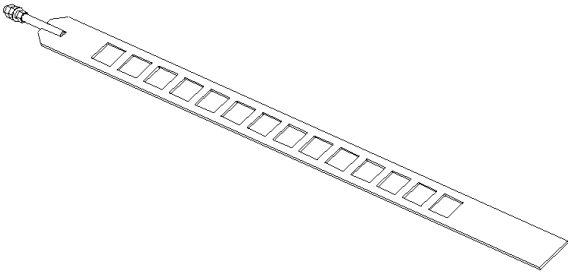

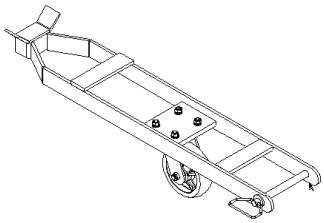

Safety racks: 4. Optional caster kit: 4 caster assemblies, only included when ordered.

<10> Remove the screws connecting the main and auxiliary columns with the packaging frame, and place 1 main column and 3 auxiliary columns in an open space

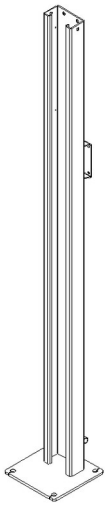

Main column 1piece

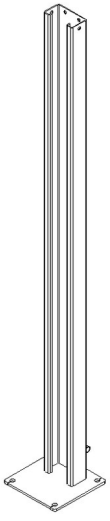

auxiliary column 3pcs

<11> Take 2pieces “tool tray” out and put it to a empty place

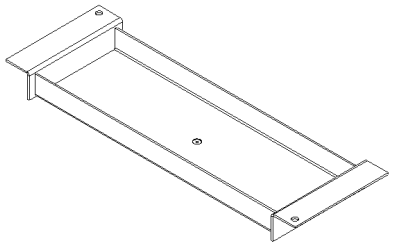

Tool tray 2pcs

<12> Remove the screws between auxiliary deck plate of second frame and the packaging frame, put the third deck plate in an open space.

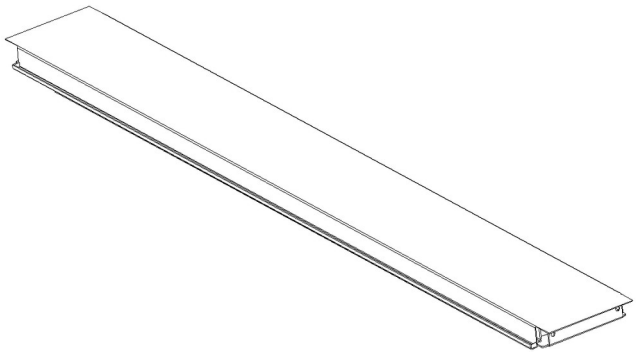

Third auxiliary deck plate

All above parts are from the whole package

Step 4: install the column and beam:

<1> Use a tape measure and chalk to mark the standing points of the four columns and make sure that the two diagonals are the same length.

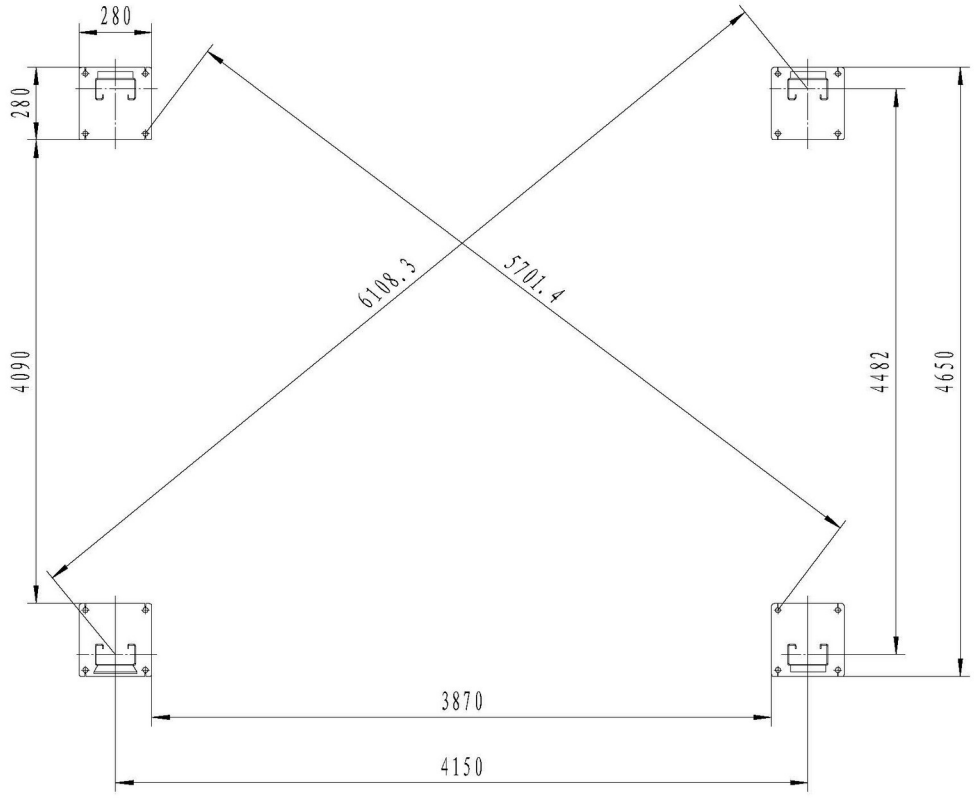

<2> Use the tire blocking bracket to padded the upright column and put the upright column down on the ground, as shown in the figure below.

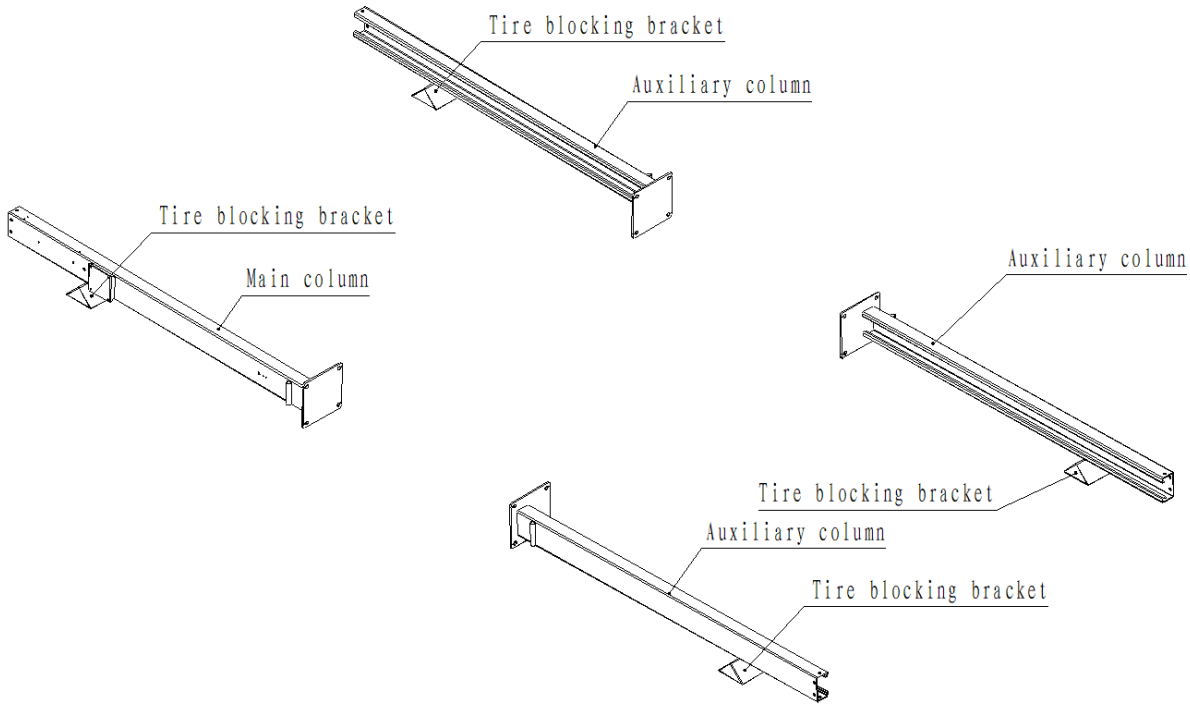

<3> Put the beam into the column, pad a 400mm high wooden block between the beam and the bottom plate of the column, and push the beam onto the wooden block (Note: When installing the beam, pay attention to the direction of the beam)

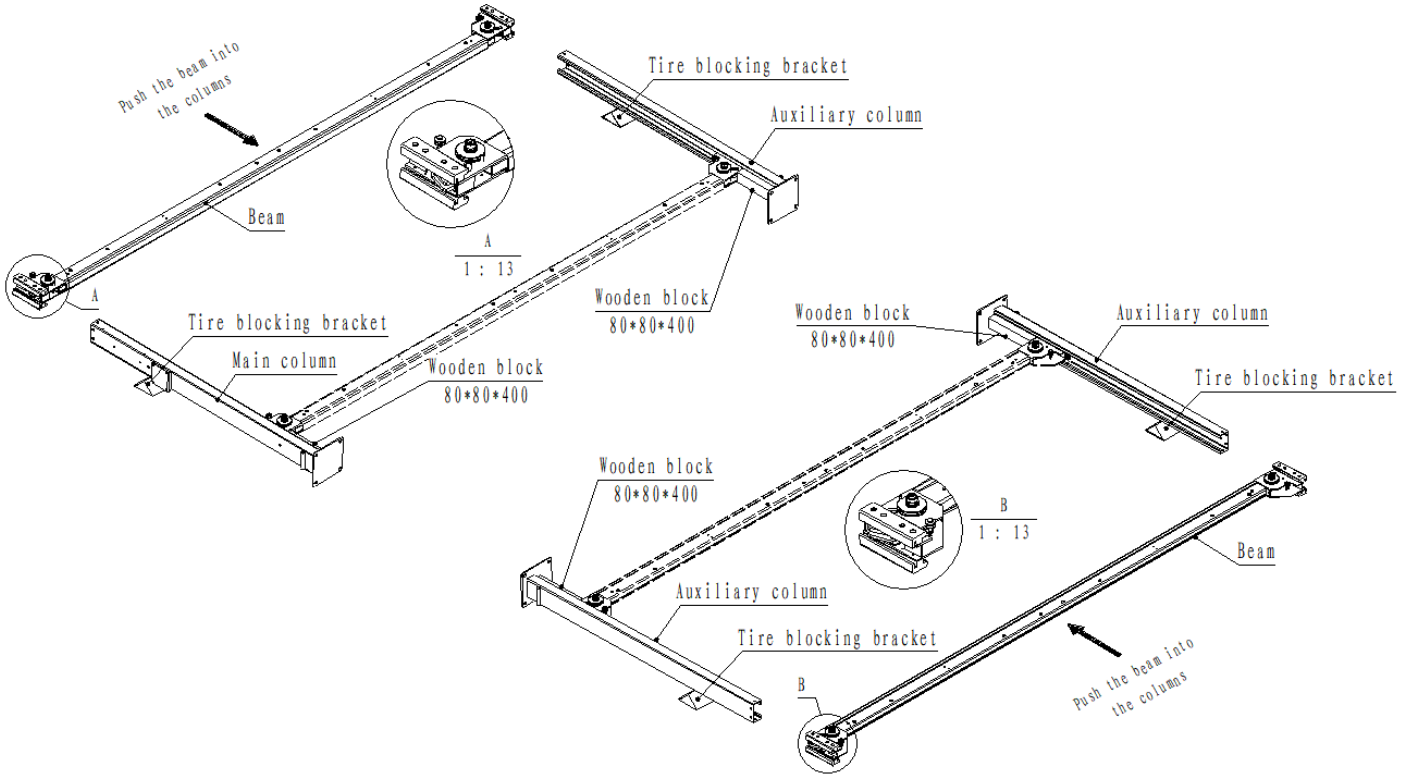

<4> Install the control box as below. (control box is optional)

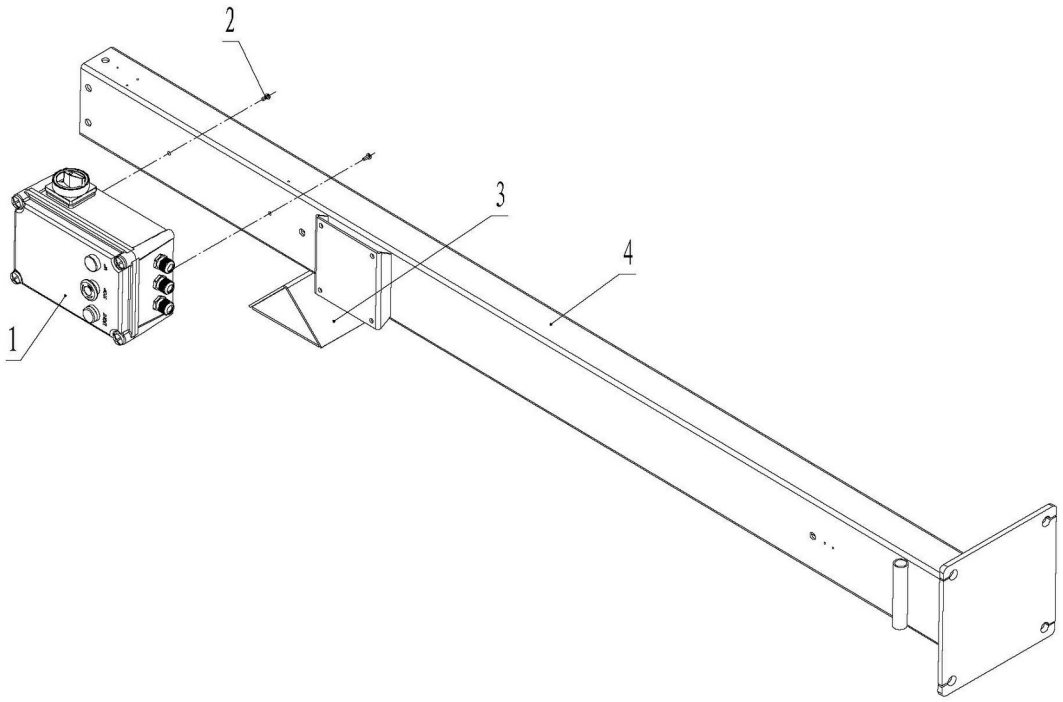

1. control box 2. M5*12 Phillips pan head screws 3.tire blocking bracket 4.main column

<5> Install the safety blocks: Unscrew the safety blocks and insert it into the rectangular slot of the beam slider until it reaches the bottom of the column.

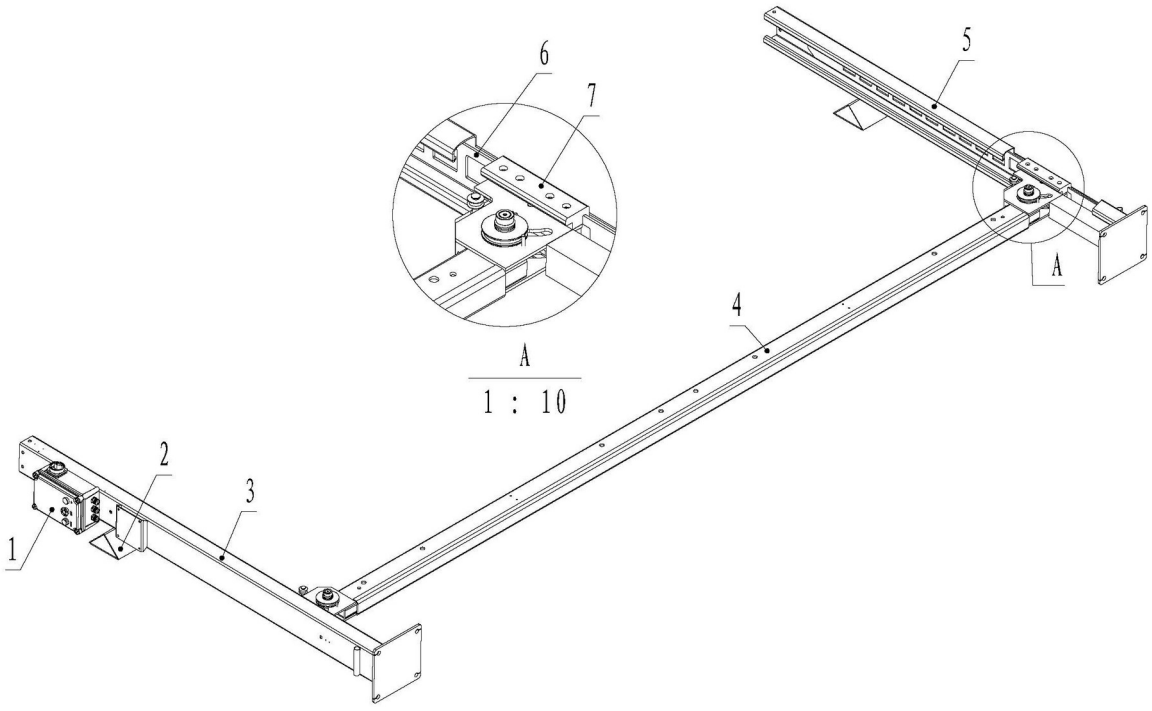

1. control box 2. tire blocking bracket 3. main column 4. beam 5. auxiliary column 6. safety block 7. beam slider

<6> Install the top plate, insert the safety block into the hole of the top plate and use the screw to fix the top plate and column.
(Attention: there are different left and right top plates) as below.

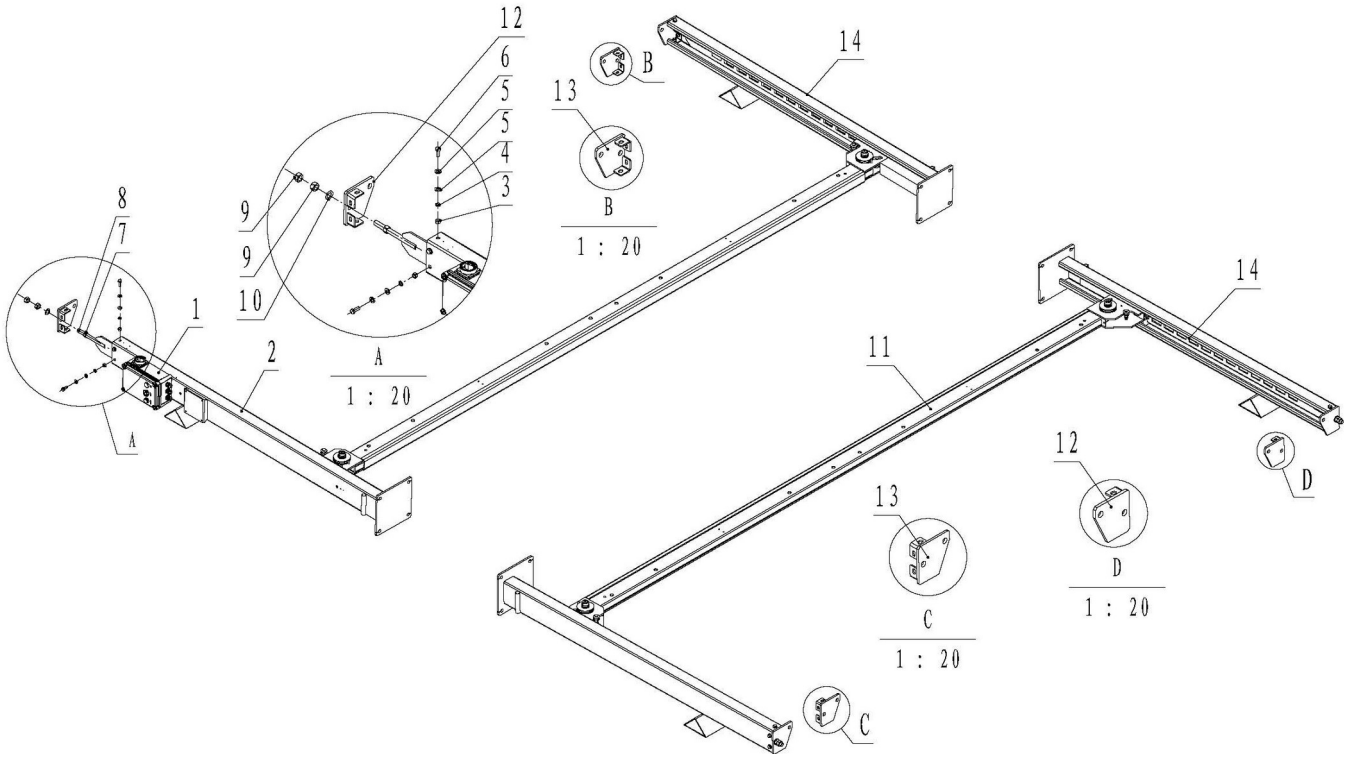

1. Control box 2. main column 3. M12 nut 4. M12 spring washer 5. M12 flat washer 6. M12*30 Hexagon screw 7. M20 special nut 8. safety rack 9. M20 nut 10. M20 flat washer 11. beam 12. main column diagonal top plates 13. auxiliary column diagonal top plates 14. auxiliary column

<7> Erect the column, as shown in the figure below. (Note: After the upright post is erected, the relative position of the four upright posts needs to be measured in order to provide accurate dimensions for subsequent installation of the deck plate)

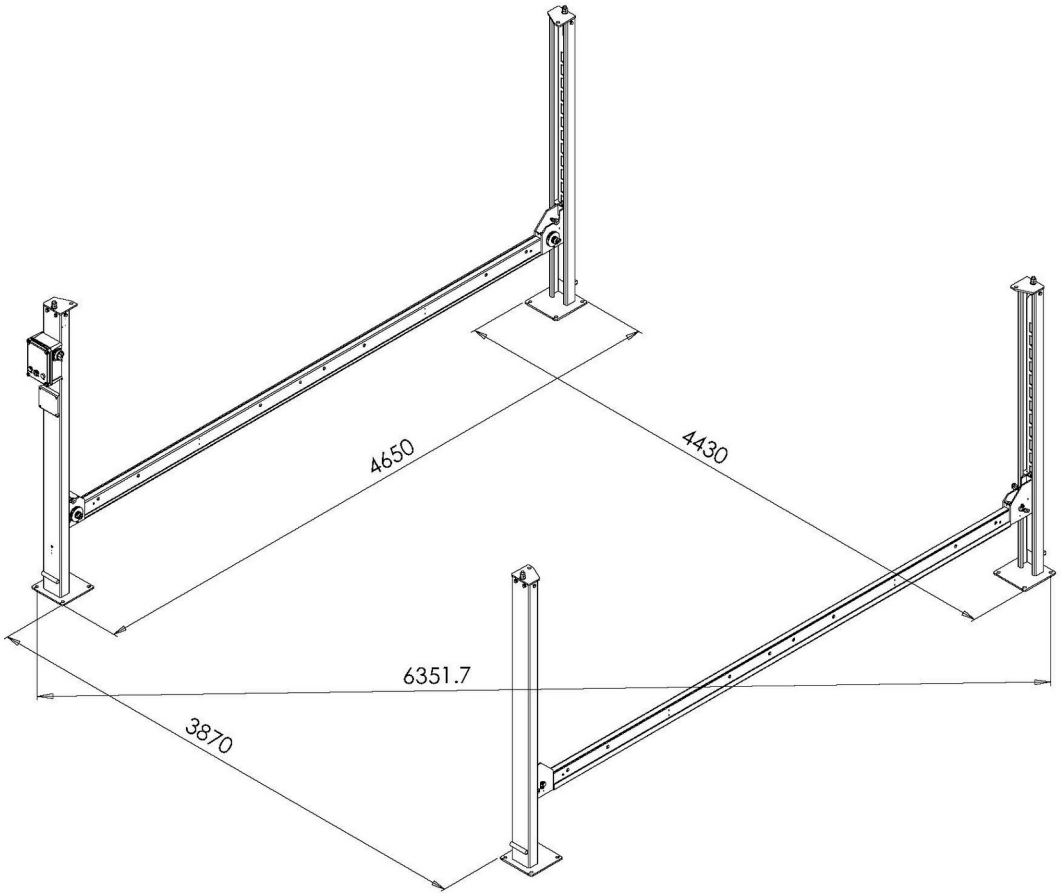

Step 5: Install the main and auxiliary deck plates and the baffle plate.

Lift the main deck plate with a crane, fix the straight joint of oil pipe on the main deck plate, pull out the four steel wire ropes, and then pull the main and auxiliary deck plates on the beam by the crane, use M18*110 external hexagonal screws, spring washer, flat washer, and nuts to fix the "stop baffle", the "beam" and the "main and auxiliary deck plates". The specific installation is as follows.

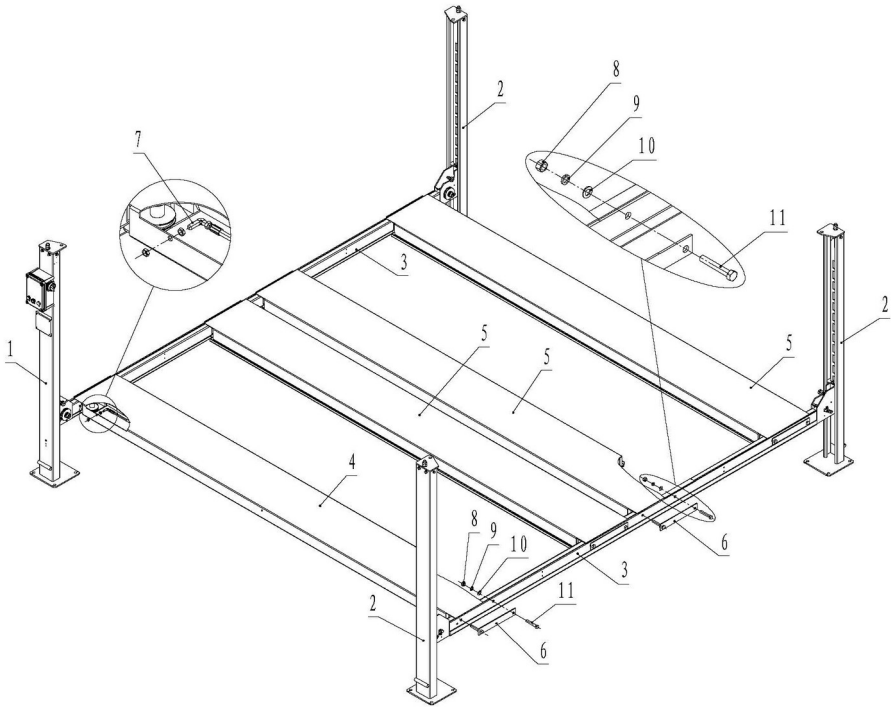

1. control box 2. auxiliary column 3. beam 4. main deck plate 5. auxiliary deck plate 6. stop plate 7. bridge fixing joint

8. M18 nut 9. M18 spring washer 10. M18 flat washer 11. M18*110 Hexagon screw

Step 6: Use of the fixing method of the four-post parking garage

Install the expansion bolts according to the foundation plan. Before installation, you need to make sure that the relative position error of the four columns should not exceed 5mm, and draw the outline of the bottom plate with chalk. The specific steps are as follows.

1. Use an electric hammer to drill the expansion bolt installation holes, and apply vertical force so that the drill bit cannot be deflected.

2. After drilling the hole, sweep away the dust to ensure that the bottom plate of the column and the other columns are accurately positioned relative to each other during the drilling process

3. If necessary, insert suitable steel shims beneath the base plate to level it. Check that the column remains vertical when tightening the anchor bolts.

4. Position the main column according to the chalk line. Follow the steps 1, 2, and 3 to install the auxiliary column.

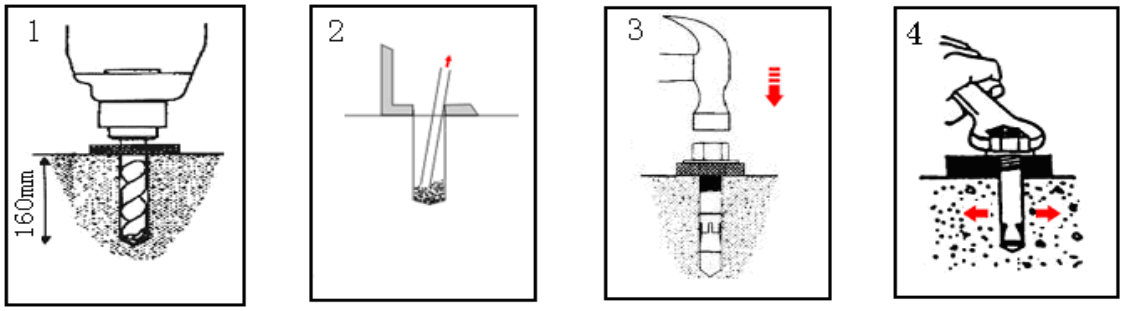

Drill holes **Clean the dust** **Knock the expansion bolt** **Tighten with a wrench**

Step 7: Installation of the wire rope

1. When installing the wire rope, first remove the M8*16 hexagon socket screws, spring washer, and flat washer that fix the beam cover on the beam, and then remove the steel wire rope limit screws M8*35 hexagon socket screws.

When the wire rope is installed, use M8*16 hexagon socket screws, spring washer, and flat washer to install the beam cover on the beam, and then use M8*35 external hexagon screws to limit the wire rope to prevent the wire rope moving away from the wire rope wheel.

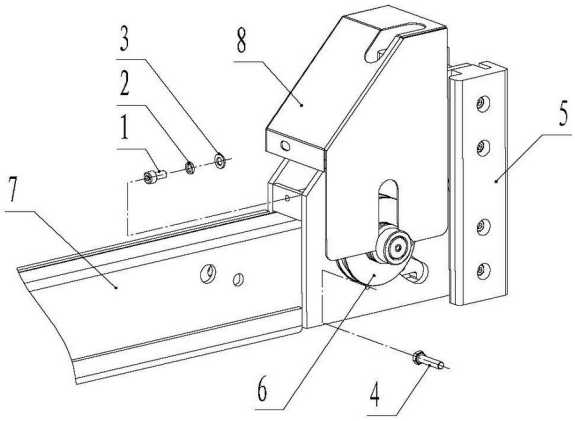

beam cover fixing and wire rope limit diagram

1.M8*16 Socket head cap screws 2. M8 spring washer 3. M8 flat washer 4. M8*35 Hexagon screw

5. beam slider 6.Wire rope wheel 7. beam 8. beam cover

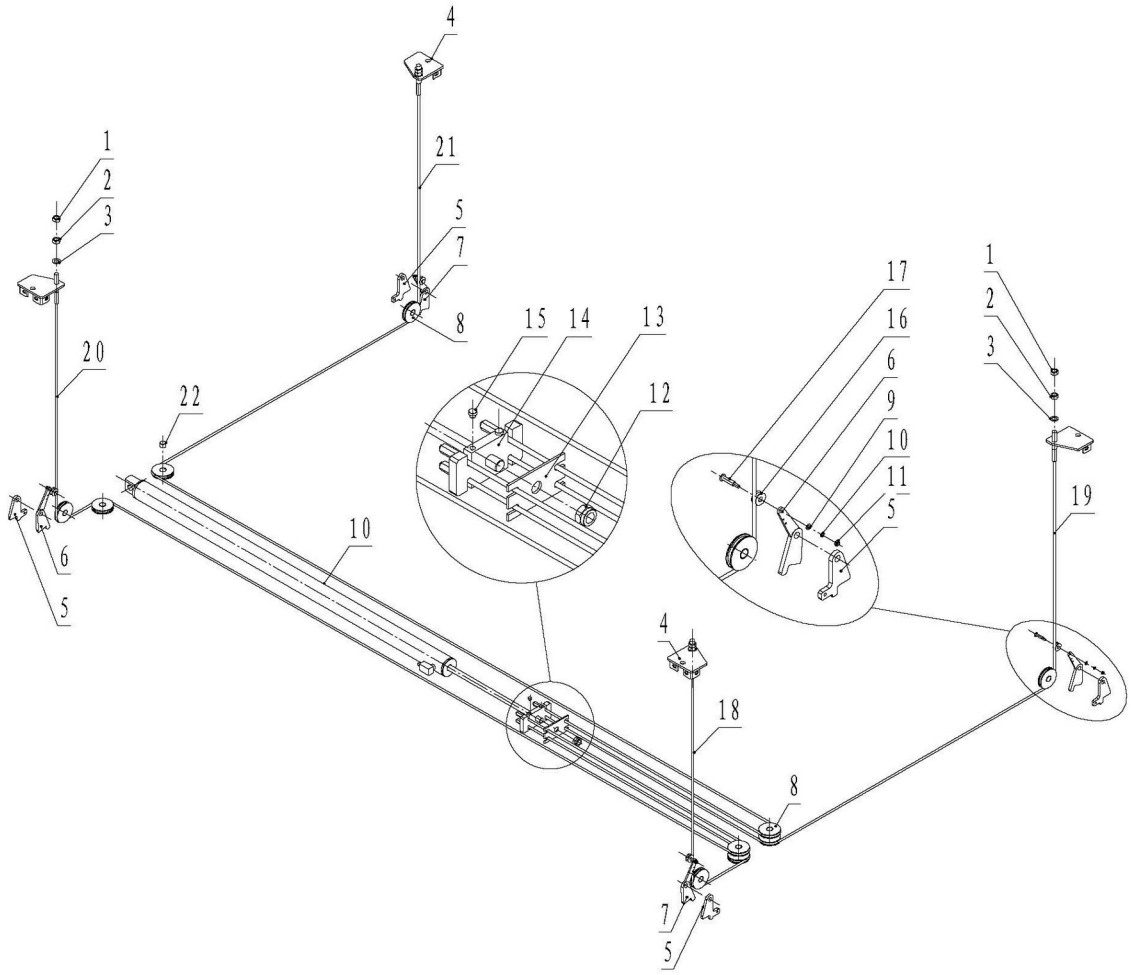

Schematic diagram of wire rope installation

1. M20 nut 2. M20 flat washer 3.Main, diagonal column top plate 4. Auxiliary, diagonal column top plate 5. Main safety plate
6. Main, the diagonal column break rope safety 7.Auxiliary, the diagonal column break rope safety 8.rope wheel 9.M8 flat washer
10. M8 spring washer 11. M8 lock nut 12. M24*2 lock nut 13. Wire rope fixing frame baffle 14. Wire rope fixing frame
15. limiting washer 16. Break rope wheel 17. Break rope safety shaft 18. wire rope 2680mm 19. wire rope 6080mm
20. wire rope 6750mm 21. wire rope 10140mm 22. Oil-free bearing 2519

Step 8:installation of power unit: as below diagram

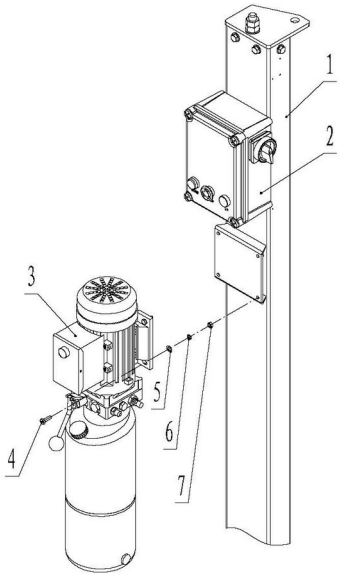

1. main column 2. control box(optional) 3. power unit 4. M8*25 Hexagon screw 5. M8 flat washer 6. M8 spring washer 7. M8 nut

Step 9: Installation of limit switch (optional), as below diagram

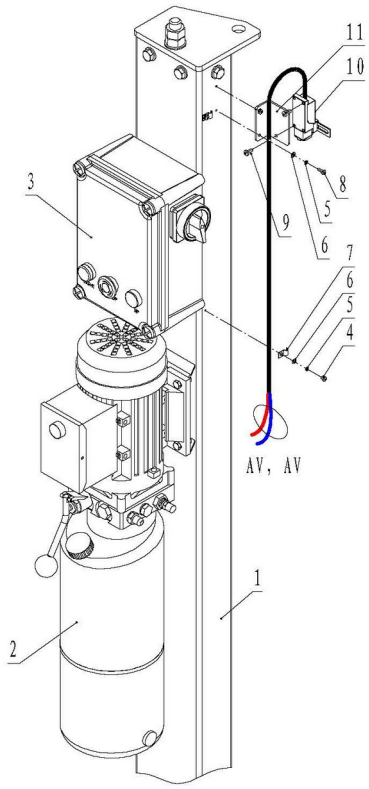

1. Main column 2. power unit 3. control box(optional) 4. M4*8 Phillips pan head screws 5. M4 spring washer
6. M4 flat washer 7. wire buckle 8. M4*12 Phillips pan head screws 9. M5*12 Phillips pan head screws
10. 8108 limit switch (optional) 11.limit switch fixing plate

Attention:wire AV, AV should connect to the terminal AV, AV of control box

Step 10: Electrical connection, 230 V single-phase. A qualified electrician must connect the supply, motor and limit switch. In the terminal illustration, use the upper single-phase row (L/N); the lower three-phase row is not applicable to this model. POWER = supply; MOTOR = motor; GROUND LINE = protective earth; LIMIT SWITCH = limit switch; DOWN LIMIT SWITCH = lower limit switch. The connection

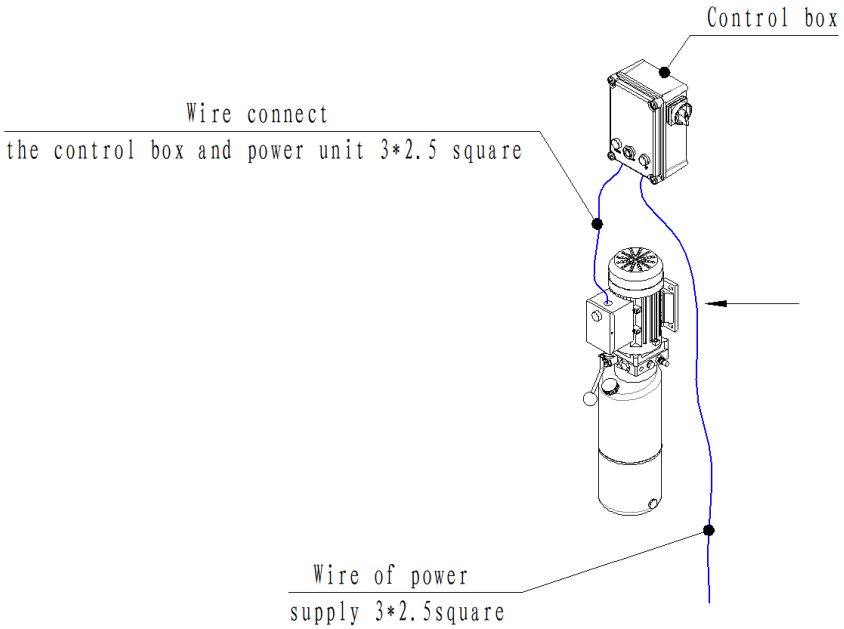

cables shown are 3 x 2.5 mm ².

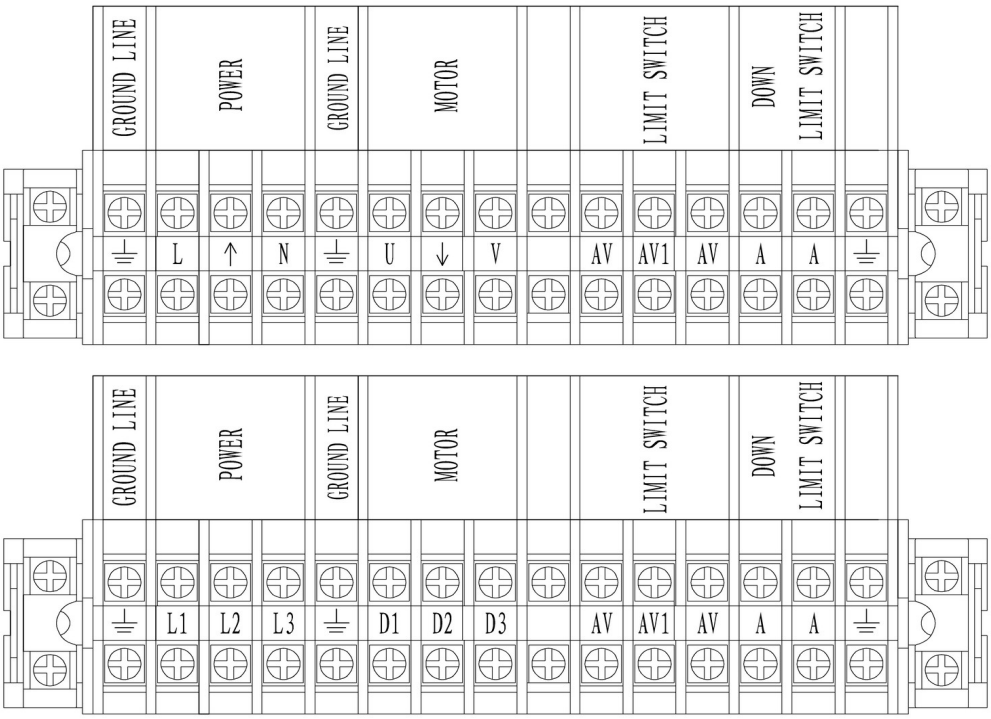

Step 11: Installation of oil hose joint as below diagram.

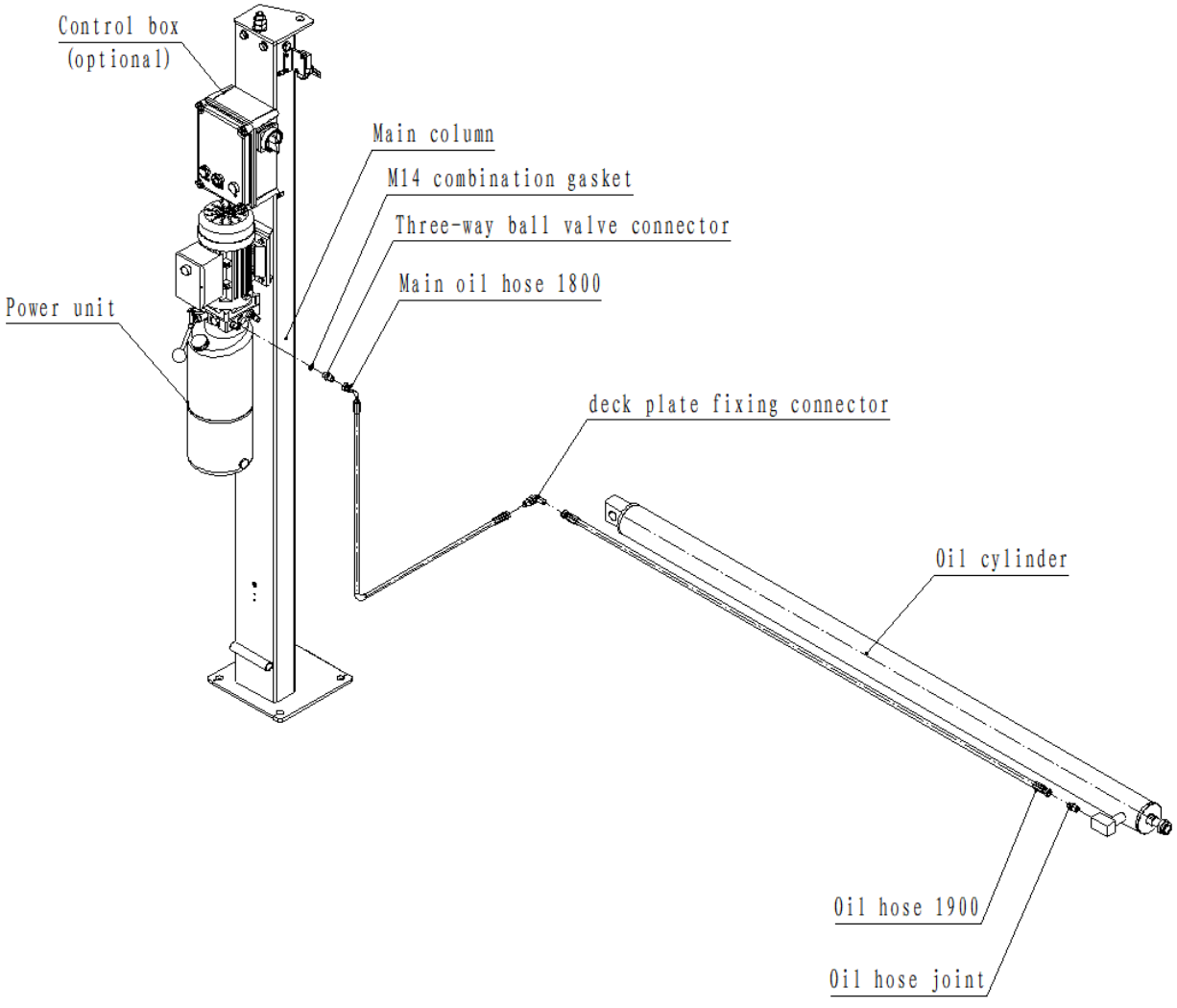

Step 12: Filling will hydraulic oil

Note: When the actual temperature of the installation site is higher than 18 degrees, it is recommended to use No. 46 anti-wear hydraulic oil, and when the temperature is lower than 18 degrees, it is recommended to use No. 32 anti-wear hydraulic oil. The viscosity of hydraulic oil largely determines the lifting speed of the lift.

The hydraulic reservoir has a capacity of 10 L. The normal fill level is approximately 80% (about 8 L), not the full tank volume.

Step 13: Test run

1. Connect to the corresponding power supply according to the power description on the machine nameplate.
2. Check whether the wire rope is in the wire rope wheel.
3. Check mechanical safety lock status.
4. No vehicles should be placed during the test run.
5. Ensure all connections are in good condition then up the parking lift to around 1500mm and lock it into the safety.

Step 14: Install safety agency system as below diagram:

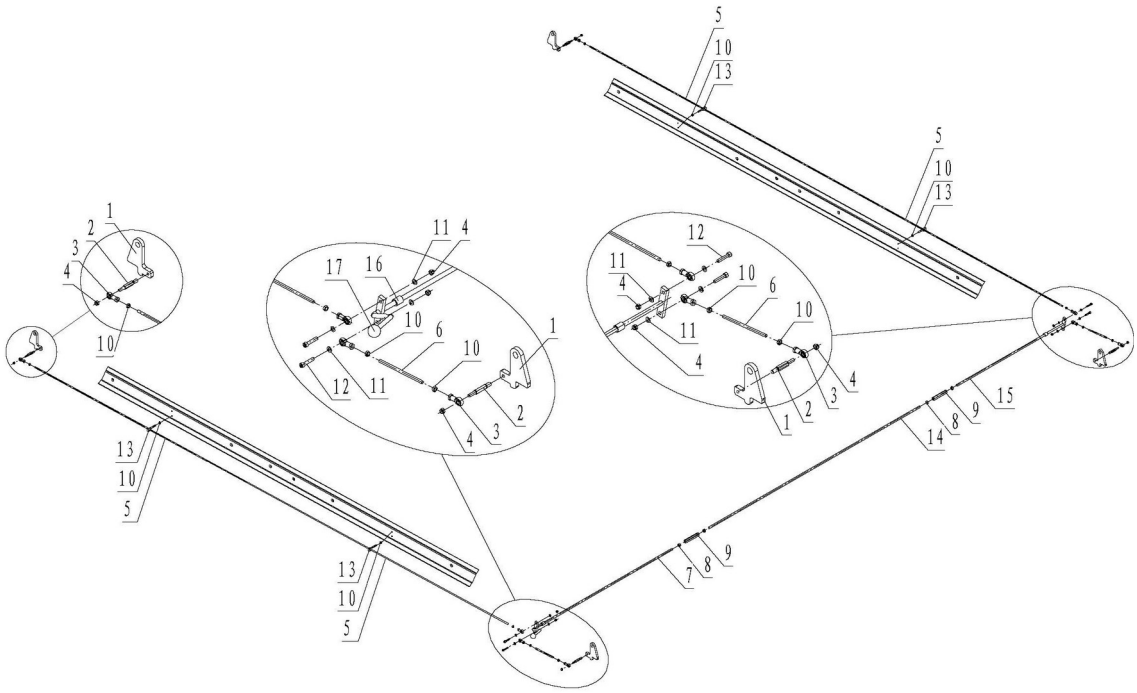

1. safety blocks 2. safety connecting rod 3. universal bearing 4. M8 lock nut 5. long tie rod 6. short tie rod 7. main safety handle
8. M12 nu t 9. threaded tie rod 10. M8 nut 11. M8 flat washer 12. M8*40 Socket head cap screws 13. fixing ring
14. connecting rod of main/auxiliary handles 15. auxiliary tie rod 16. Handle isolation sleeve 17. Bakelite ball

Step 15: Adjust the four-point level of the lift:

Hold the UP button for approximately 3–5 seconds to lift the platform clear of the safety locks. Then operate the manual safety-release handle and the lowering-valve handle together. Lower fully, raise to 1000 mm and engage the mechanical locks. Adjust the level at all four corners as described below.

A: Leveling of the whole machine

Turn on the power switch on the control box, release the emergency stop switch, press the up button, after the wire rope to be fully tightened, measure whether the distances from the ends of the two beams to the bottom plate of the main and auxiliary columns are equal. If they are not equal, adjust the top of the column Wire rope nuts until the distances from the four ends of the two beams to the bottom plate are the same.

B: The leveling of safety

Press the unloading handle of the power unit, the lift goes down to a state where the safety lock is active. At this time, the wire rope is in a relaxed state. Now measure whether the distances from the ends of the two beams to the bottom plate of the main and auxiliary columns are equal. If not equal , adjust the nut on the top of the safety block in the column until the distance between the four ends of the two beams and the bottom plate

are the same.

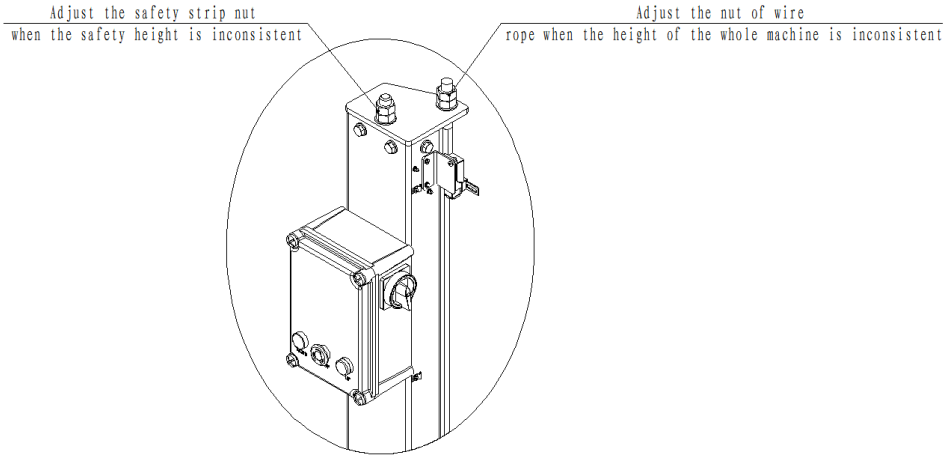

Step 16: Set the upper limit switch so that the maximum lifting height is 1880 mm.

Step 17: Install the oil drip tray, tool tray, front and rear baffle plates.

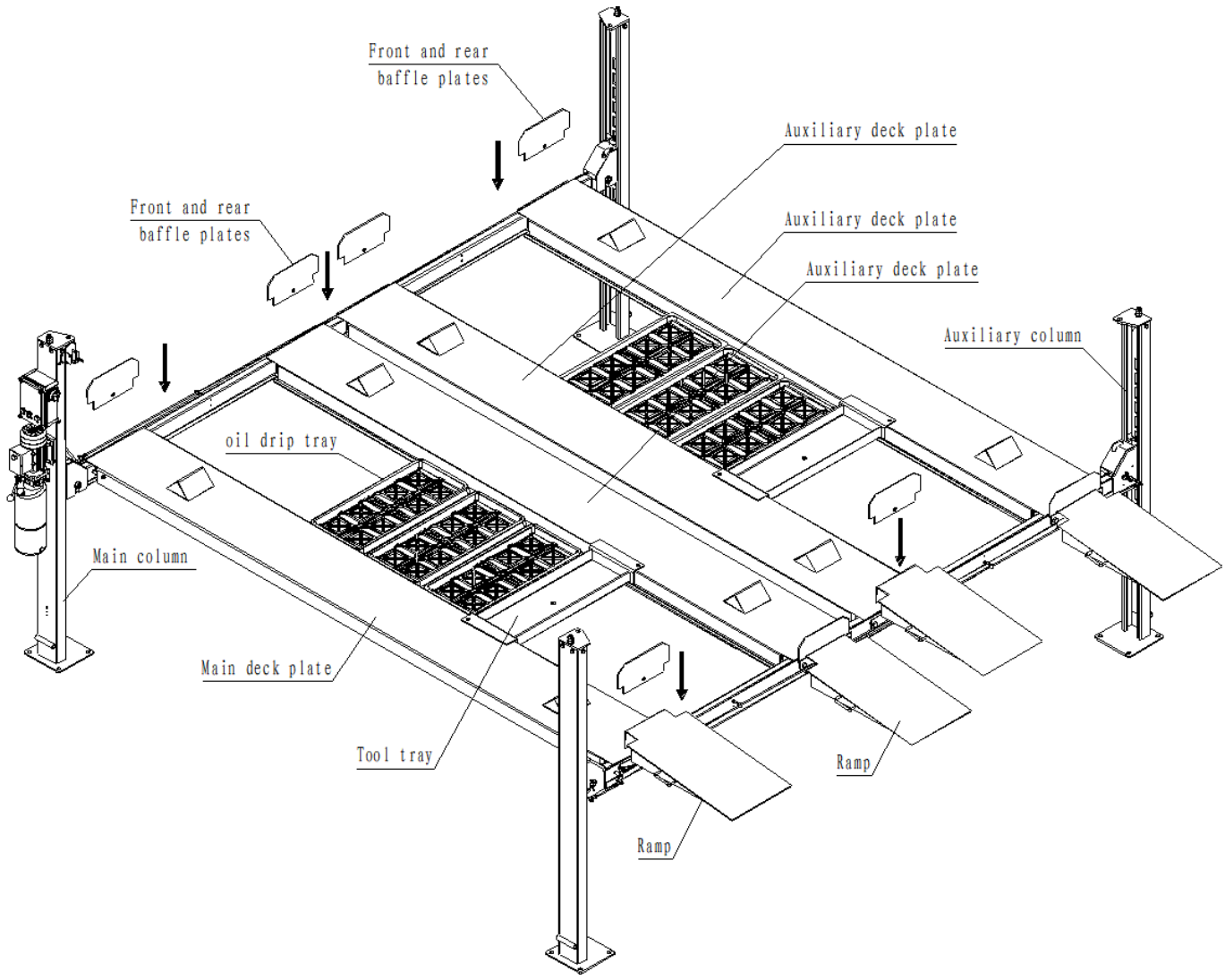

Step 6A: Use of the four-post parking garage with mobile wheel kit method.

The functions and instructions of the mobile wheel kit are as follows:

A. The optional caster kit is only for moving the empty lift to another suitable position. Never move the lift with vehicles on it.

B. When lifting the vehicle, the mobile wheel kit must be removed, and the ground concrete strength is required to be above 3000psi, the error is less than 5mm, and the minimum thickness must not be less than 150mm

C. After removing the caster kit, perform a complete unloaded lifting and lowering cycle. Check that all components are correctly installed before driving a vehicle onto the lift.

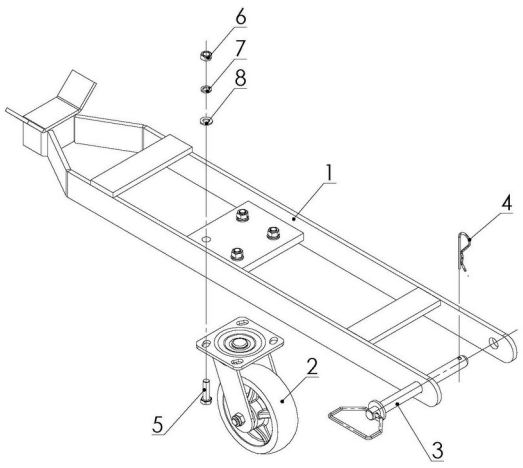

Mobile kit

1.mobile kit welding part 2. universal wheel

3. mobile kit pull ring 4. spring circlip

5. M10*35 hexagon screw 6. M10 nut

7. M10 spring washer 8. M10 flat washer

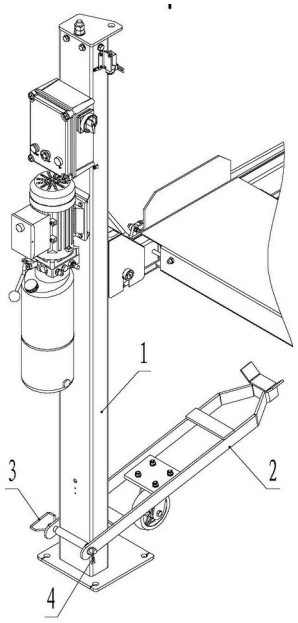

Installation of the mobile kit

1. main column 2. mobile kit

3. mobile kit pull ring 4. spring circlip

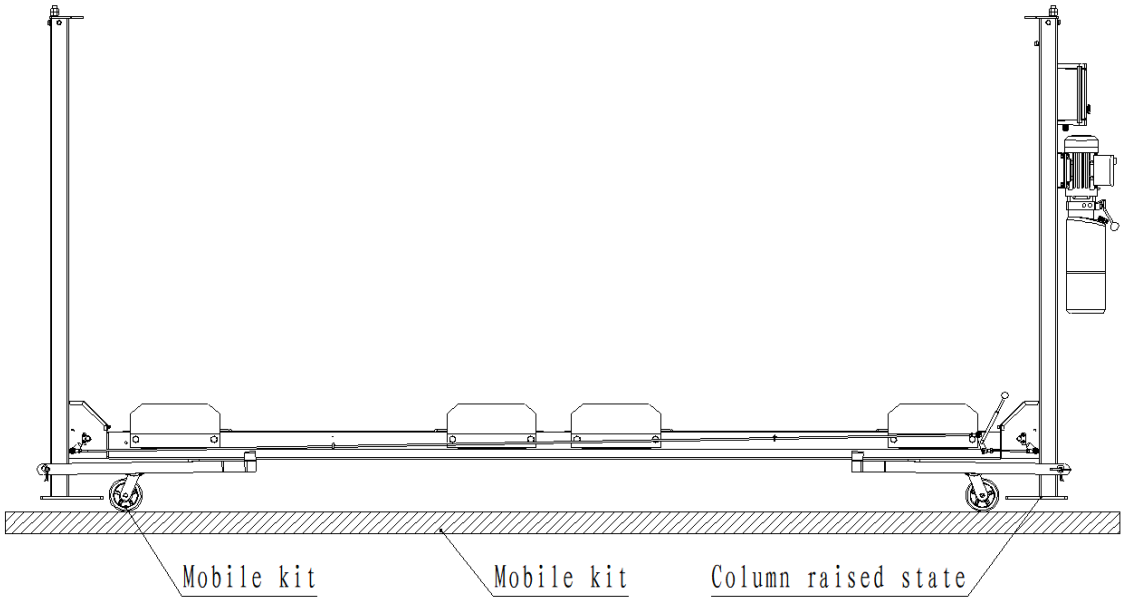

Warning

1. The installation and use of step 6 and the mobile wheel kit use method of step 6A can be used for the four-post parking lift, and the customer can choose one of them according to the actual situation

2. The above steps are all the installation steps of four-post parking

3. Hammer Tools is committed to continuously improving product quality and updating technical specifications, subject to change without notice

4. Check the precautions after installation

- 1 Whether the column is perpendicular to the ground
- 2 Whether the oil pipe connection is in place
- 3 Whether the wire rope connection is in place
- 4 Whether the main and auxiliary deck plates are installed in place
- 5 Is the electrical connection correct?
- 6 Is the connection of other parts tight?

Operation

4.1 Instructions for operation notes

4.1.1 Check all connections with the tubing and the machine can only be used if there is no oil leak.

4.1.2 If the safety device of parking lift fails, it must not be put into use.

4.1.3 Position the vehicle's centre of gravity within the centre of the lifting area. Do not operate the lift with an incorrectly positioned load.

4.1.4 During the up and down of the lift, the operator and other staff must be in the safe area.

4.1.5 When the lifting arm rises to the desired height, the power must be turned off to avoid the incorrect operation of the non-operator.

4.1.6 Before parking the vehicle under the parking equipment, you must press the down handle to ensure that the safety lock is in the engaged state. When the parking lift is ascending and descending, all persons and vehicles are not allowed under the parking equipment.

4.2 Operation flow chart

Raising	Lowering
Clear the area and position the vehicle correctly.	Completely clear the area beneath the lift.
Switch on and hold UP.	Switch on.
Check stability and raise to the required height.	Raise slightly, then operate the safety-release and lowering-valve handles together.
Lower onto the mechanical locks and switch off.	Lower fully before driving the vehicle away.

4.3 Control box operation instruction

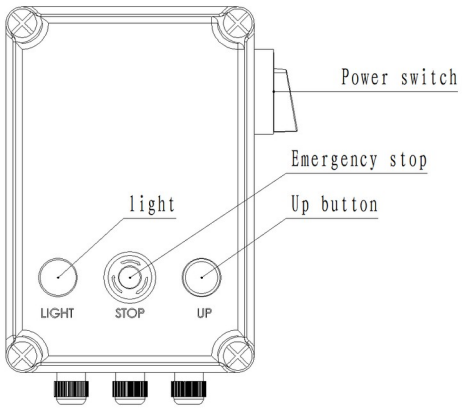

4.4 Operation instructions

Lift up

1. Turn on the power.

2. Put the vehicle in the middle of the platform, otherwise the danger of rollover may occur.

3. Press and hold the up button to raise the lift to the height you need, release the up button, and the lift will stop immediately.

4. At the required height, check that the vehicle is stable. Operate the lowering-valve handle on the hydraulic power unit until all mechanical safety locks support the platform. Switch off the power.

The lift is for parking only. It is not a workshop lift for work beneath vehicles.

Lift down

1. Clear all persons, vehicles and obstacles from beneath the lift. 2. Switch on the power. 3. Press UP to lift the platform clear of the mechanical safety locks.

4. Hold the manual safety-release handle and the lowering-valve handle on the hydraulic power unit at the same time to lower the lift.

5. When descending to the point where the machine touches the lower limit switch, the buzzer will alarm and the lift will continue to descend until it descends to the lowest position. (Optional for this function)

6. Drive the car away

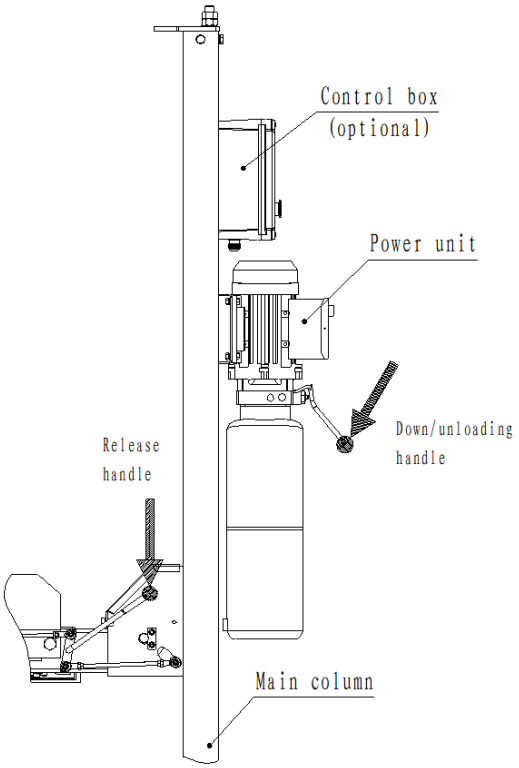
Control box
(optional)
Power unit
Down/unloading
handle
Release
handle
Main column

Problem diagnosis and solution

Attention:

If you cannot resolve a fault, stop using the lift and contact Hammer Tools. Provide a description and photographs of the fault to assist diagnosis.

Fault phenomenon	cause	solutions
Abnormal noise	Friction or scoring inside the column	Add lubricating oil to the inner column
	Obstructions inside the column	Clean up internal obstacles
The motor does not turn and not rise	Motor winding damaged	Replace the motor
	Bad wire contact	Check and connect the lines
	Limit-switch wiring disconnected or switch malfunction	Connect the line. Adjust or replace the limit
The motor turns but does not rise	Incorrect motor rotation direction	Correct wire connection
	Pressure-relief valve loose or obstructed	Adjust or clean the pressure-relief valve
	The gear pump is damaged	Replace the gear pump
	Hydraulic oil insufficiency	Replenishing hydraulic oil
	Suction pipe loose	Tightening suction pipe
	Cushioning valve loose or obstructed	Tighten or clean the buffer valve
Lift slowly sinks after raising	Cylinder seal leaking	Replacement of seals
	Check valve leaking or defective	Dismantle and clean the component; replace it
	Pressure-relief valve defective	Dismantle and clean the component; replace it
	Manual lowering valve or solenoid lowering valve defective	Dismantle and clean the component; replace it
	Wire ropes loose or incorrectly adjusted	Check wire-rope tension and level adjustment
Lifting too slowly	The oil filter is blocked	Dismantle and clean the component; replace it
	Air in the hydraulic oil	Replenishing hydraulic oil
	Incorrect pressure-relief valve adjustment	adjust
	Hydraulic oil hotter than 45 °C	Replace the hydraulic oil
	Wear of oil cylinder seals	Replacement of seals piece
	Cylinder lubrication is not good	Replace the lubricating oil within the cylinder
Lowering too slowly	Flow-control valve stuck or obstructed	Dismantle and clean the component; replace it
	The hydraulic oil is dirty	Replace the hydraulic oil
	Hose-rupture valve obstructed	Replace the hose-rupture valve
	Oil tube obstruction	Oil tube obstruction
Wire rope frayed	No grease lubrication during installation	Replace the steel cable

Maintenance instruction

The routine maintenance of simple and low cost can ensure the normal operation and safety of the machine. The following are the routine maintenance requirements.

The following recommended routine maintenance time can be based on the use environment and frequency of the lift.

The parts that need lubrication are shown below:

A: wire rope

B: Sliding blocks inside the columns

C: All wire-rope pulley bearings

D: Main safety-lock mechanism

E: Cable-break safety mechanism

6.1 Check the following items before daily operation

Before each use, inspect the lift. Check the safety locks every day. A faulty safety lock can cause serious injury or death. Do not operate a lift with defective safety equipment.

During operation, listen for the engagement of all mechanical safety locks.

▲ Check the connection and leakage of the hydraulic pipe.

▲Check the connection of the wire rope and the connection of the electrical part.

▲ Check the fastening of anchor bolts. check it when fix it

6.2 Weekly check content

▲Check the flexibility of the moving parts.

▲Check the status of security components.

▲ Check the volume of hydraulic oil. Press the ascending key to make the platform rise to the highest level. If you can't reach the highest altitude, the hydraulic oil in the tank is not enough.

▲ Check the fastening of anchor bolts. check it when fix it

6.3 Contents of monthly routine inspection

▲Fastening of bolts

▲The sealing of hydraulic system, if oil leak detection, tighten the joint position.

Check the pins, rollers, carriages and related moving parts for wear and correct lubrication. Replace damaged parts promptly.

▲ Check the lubrication and wear of the steel cable.

6.4 Content of annual routine inspection

▲Empty the tank to check the hydraulic oil condition.

▲Clean the filter in the tank.

Warning:

If the machine is maintained in strict accordance with the above requirements, the machine will always be in a normal working state. At the same time, it can largely avoid accidents.

Appendices

Enclosure 1 Packing list

No.	Figure No.	Name	Quantity	Remarks
1	—	Main deck plate	1	
2	—	Auxiliary deck plate	3	
3	—	Main column	1	
4	—	Auxiliary column	3	
5	—	Main diagonal column top plate	2	
6	—	Auxiliary diagonal column top plate	2	
7	—	Safety blocks	4	
8	—	Beam assembly	2	
9	—	Ramp welding	4	
10	—	End of beam cover A	2	
11	—	End of beam cover B	2	
12	—	oil drip tray	6	
13	—	Tool tray	2	
14	Non	Hydraulic power unit	1	230 V, single-phase
15	—	Caster kit (optional)	4	
16	—	Front/rear baffle	8	
17	—	Baffle plate	8	
18	—	Tire blocking brackets	8	
19	Non	Safety institution	1	
20	Non	Parts box	1	

Parts list for optional

No.	Figure No.	Name	No.	Remark
1	Non	Control cabinet	1	230 V, single-phase
2	Non	M5*12 Phillips pan head screws	2	
3	—	Fixing plate of limit switch	1	ME8108 limit switch with wire 1 meter 2*0.75 square up limit switch part
4	—	Limit switch ME8108	1	
5	Standard	M5*12 Phillips pan head screws	2	
6	Standard	M4*12 Phillips pan head screws	2	
7	Standard	M4 spring washer	4	
8	Standard	M4 flat washer	4	
9	Standard	M4*8 Phillips pan head screws	2	
10	Standard	6mm wire card	2	

Spare parts list (standard)

No.	Figure No.	Name	No.	Remark
1	Non	M12*30 Hexagon screw	16	Galvanized
2	Non	M12 flat washer	32	Galvanized
3	Non	M12 spring washer	16	Galvanized
4	Non	M12 nut	16	Galvanized
5	Non	M16*120 anchor bolt	16	Galvanized
6	Non	M8*25 Socket head cap screws	4	Galvanized
7	Non	M8 flat washer	4	Galvanized
10	Non	M8 spring washer	4	Galvanized
11	Non	M8 nut	4	Galvanized
12	—	Main safety connecting rod	4	Galvanized
13	Non	M8 lock nut	4	Galvanized
19	Non	M18*110 Hexagon screw	16	Galvanized
20	Non	M18 flat washer	16	Galvanized
21	Non	M18 spring washer	16	Galvanized
22	Non	M18 nut	16	Galvanized
23	—	Main oil hose 1800	1	
24	—	Three-way ball valve connector	1	
25	Non	M14 combination gasket	1	
26	Non	Manual	1	

Appendix 2: Dimensions

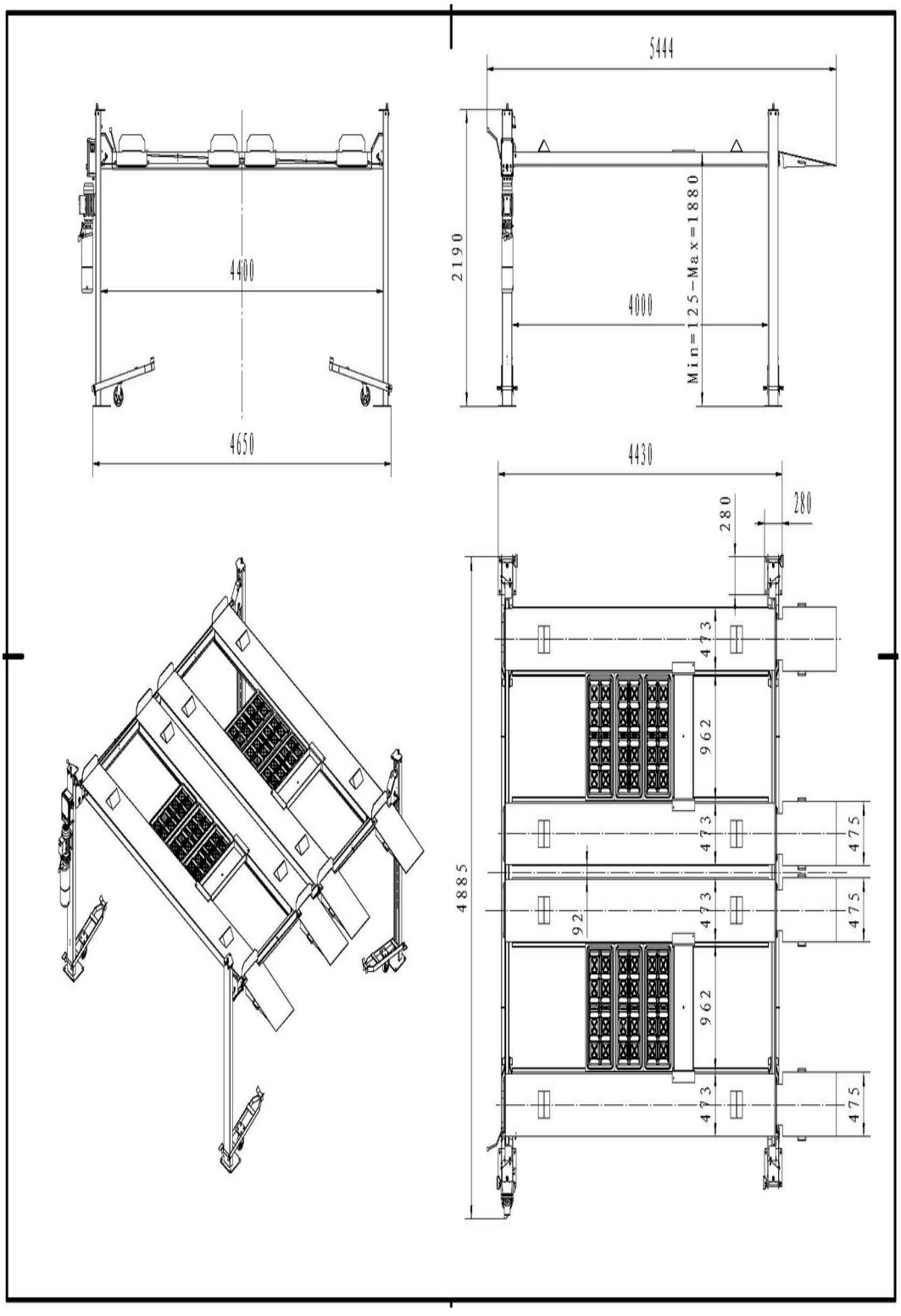

Enclosure 3: Foundation installation drawing

The foundation diagram of the lift when used in a fixed manner is as follow.

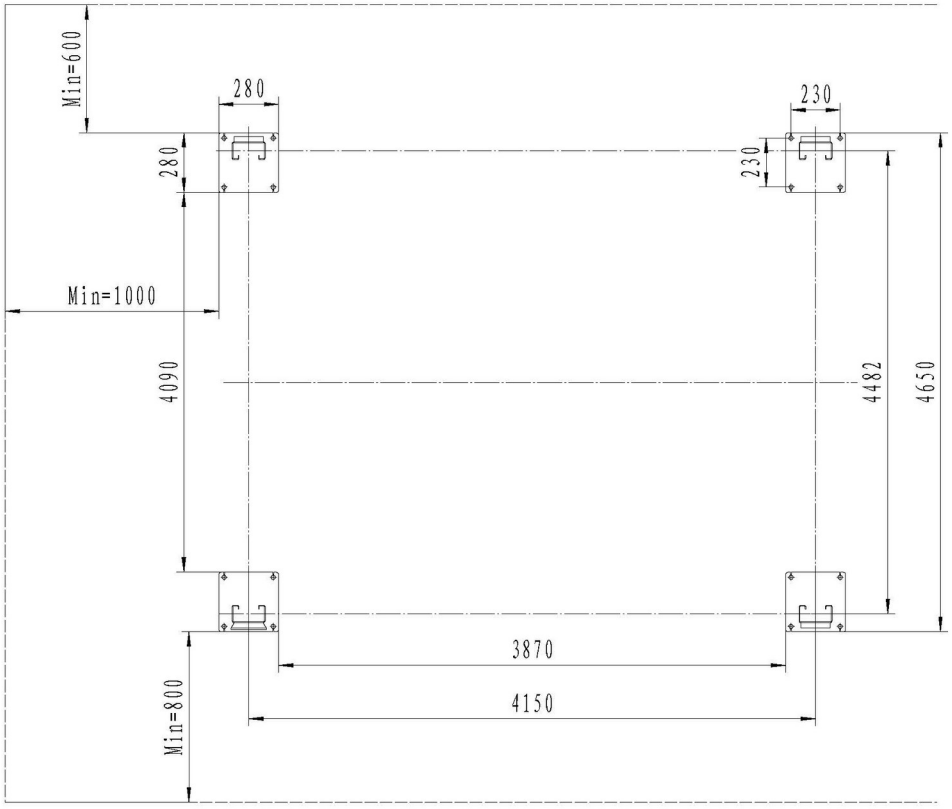

Enclosure 4: Hydraulic schematic diagram

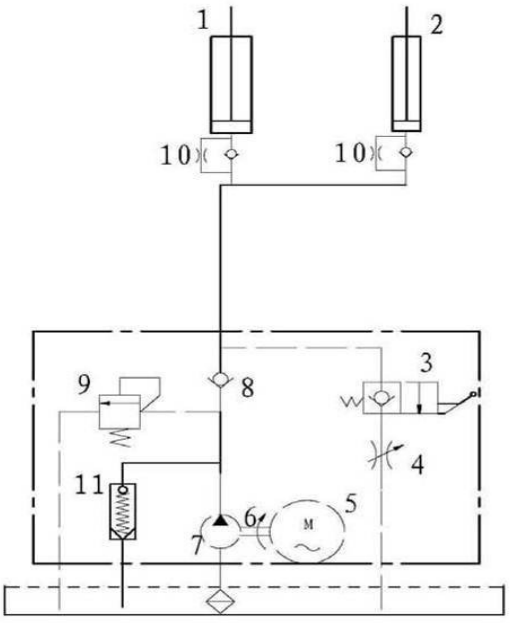

1.1. Cylinder 2. Hose-rupture valve 3. Check valve 4. Pressure-relief valve 5. Manual lowering valve 6. Motor 7. Gear pump 8. Flow-control valve 9. Filter

Enclosure 5: Schematic diagram of electrical equipment

230 V single-phase – electrical schematic (source circuit labelled 220 V). Match the actual motor and control components to the nameplate before connection.

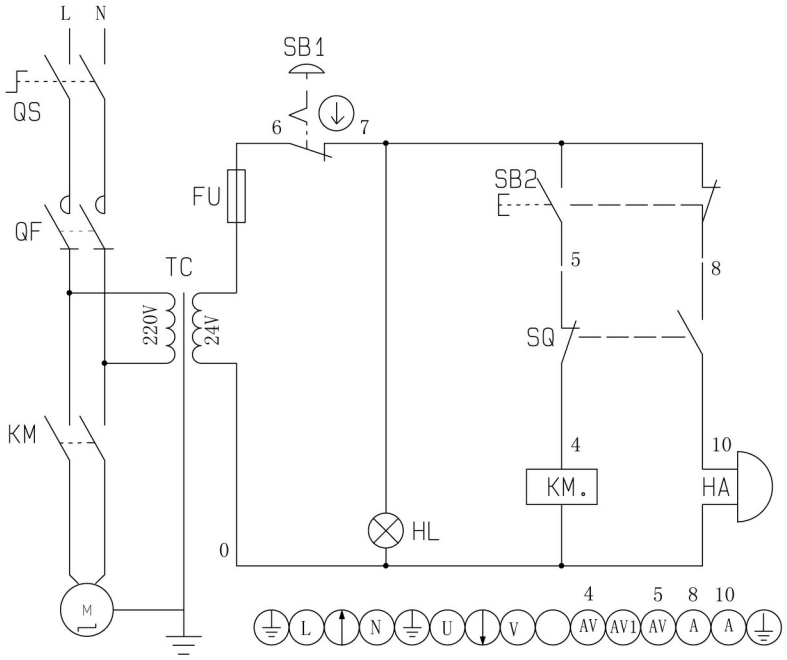

QS	Main Switch	QF	Fuse	KM	AC contactor	TC	Transformer
FU	Fuse	SB1	Emergency stop switch	SB2	UP button	SQ	Limit switch
HL	Indicator light	HA	Buzzer				

Illustration terminology

In source illustrations, “insurance” refers to mechanical safety locks, “power unit” to the hydraulic power unit and “parachute valve” to the hose-rupture valve. The wiring labels and terminal identifiers must be matched to the actual components by a qualified electrician.